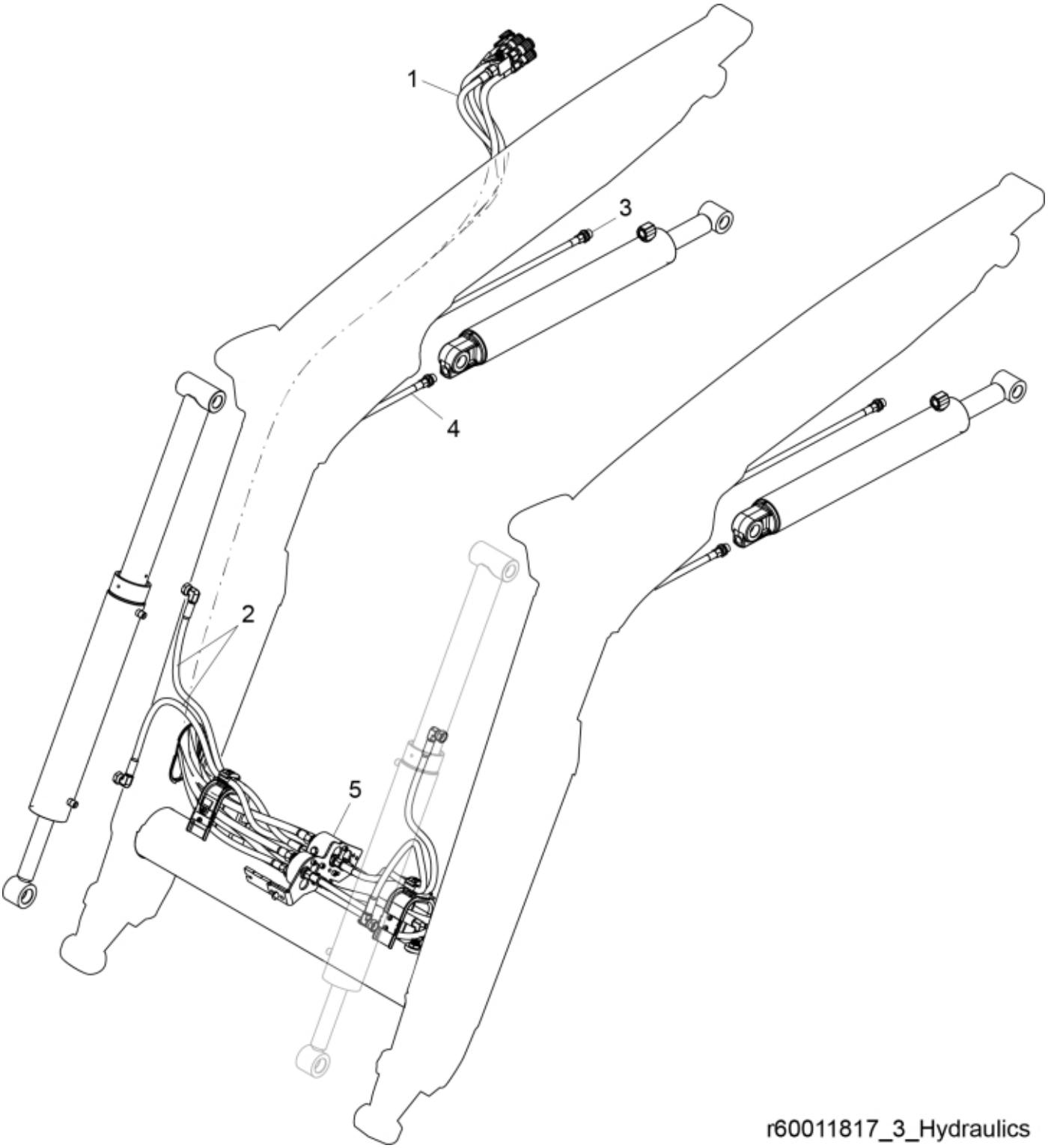

© 2025 Jost

Part assemblies Hydraulics

Hydraulics:Cylinder hoses

PartNo	Pos	Qty	Name	Specifications
- - -	1	1	Main hose kit	See separate part list
60006749	2	4	Hose	3/8" L=1130 3/8GRLM - 3/8G90LM
60006794	3	2 PCS	Hose	3/8" L=3130 3/8"GRLMA - 3/8GRLMA
60006795	4	2 PCS	Hose	1/2" L=2315 1/2GRLMA - 1/2GRLMA
4500233	5	1	CVU Basic	MSL

© 2025 Jost