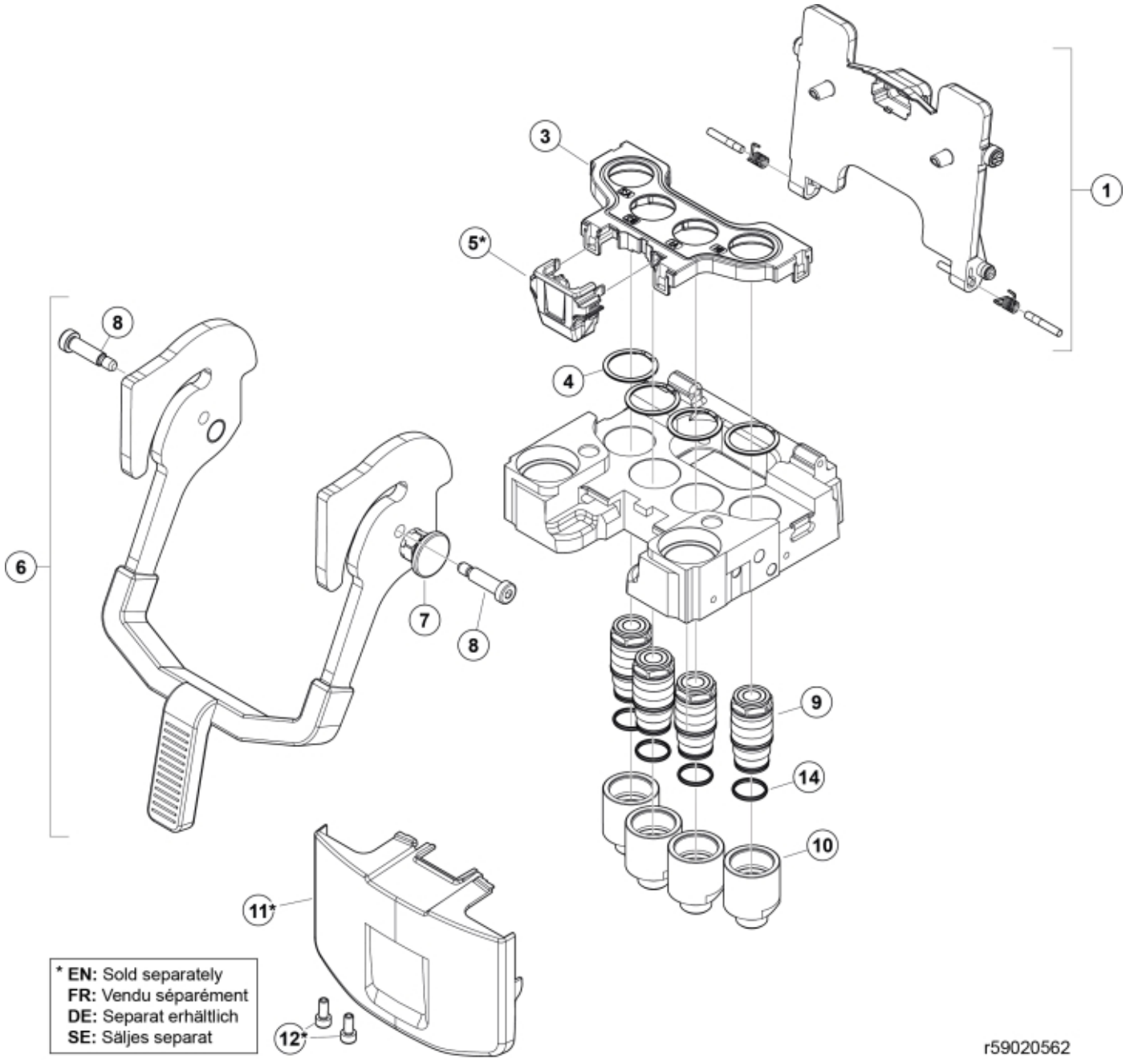
1
3
5*
8
4
6
7
8
9
14
10
11*
12*
* EN: Sold separately
FR: Vendu séparément
DE: Separat erhältlich
SE: Säljes separat
r59020562

© 2025 Jost

Description	ORFS 13/16
Part assemblies	Multi coupling base, QC6c-2
Specification	Specification: QC6c-2

PartNo	Pos	Qty	Name	Specifications
59021037	1	1 PCS	Cover kit	
59021024	3	1	Cover	
59021051	4	4	Circlip	
59021025	5*	1	Connector Support	Sold Separately
59021057	6	1	Lever cpl, QC6	
59021063	7	1	• Safety lock	
59021062	8	1	• Screw kit	
59021041	9	4	Coupling	
59021072	10	4	Adaptor	ORFS 13/16
59000024	11*	1	Cover	Sold Separately
59030602	12*	2	Screw	M5x10 Sold Separately
59021044	14	1	Seal kit	for coupling/adaptor (supplied in bags of 10)

© 2025 Jost