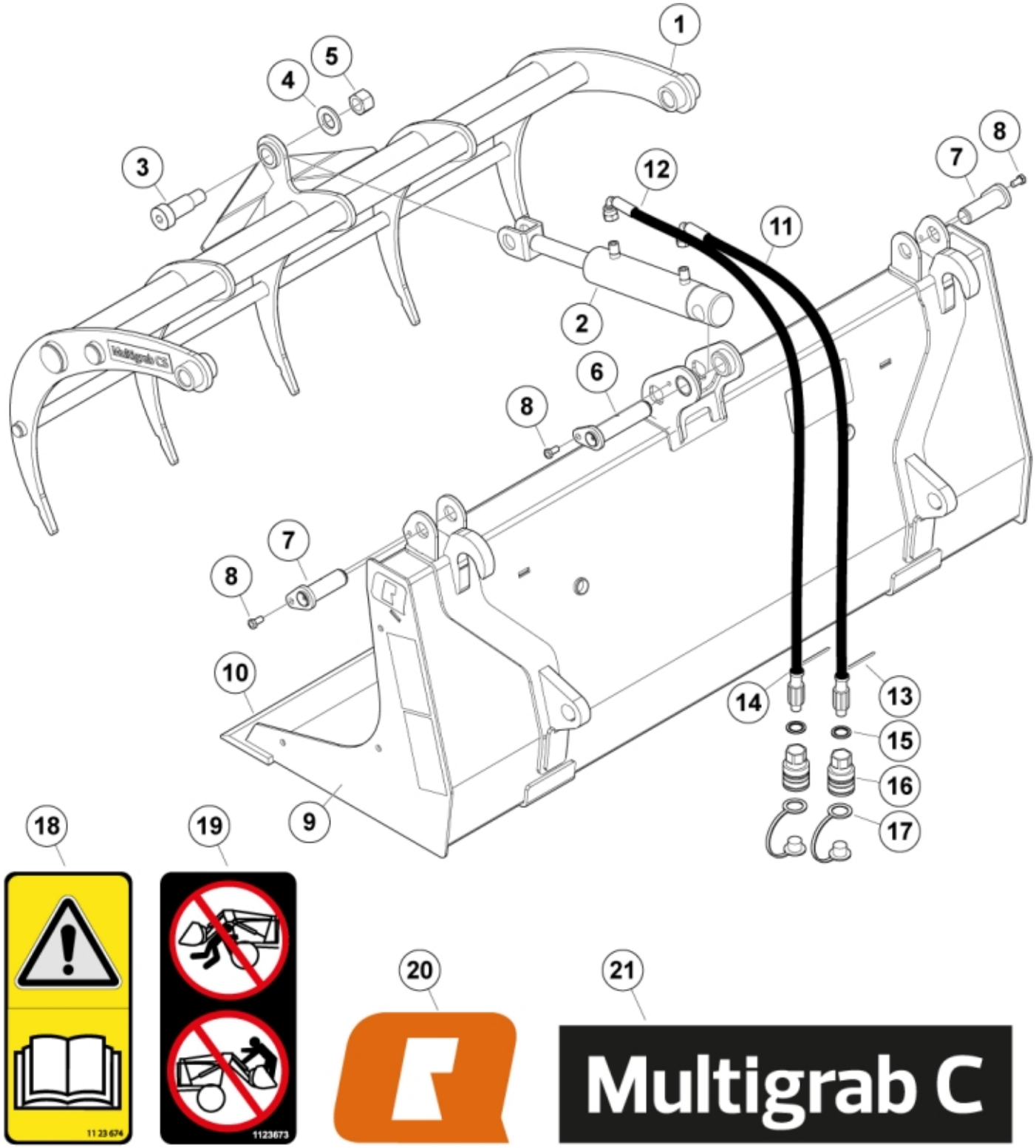

r 11256338

© 2025 Jost

Part assemblies	Multigrab CS 120 Euro	
Specification	Year From: 7/3/2023 12:00:00 AM	

PartNo	Pos	Qty	Name	Specifications
11256338		1	Multigrab CS 120 Euro	
	1	1	Jaw	
60084827-1	2	1	Cylinder	
5052447	3	1	Screw	M20x45
5050335	4	1	Washer	BRB 25 x 45 x 4
5011559	5	1	Nut	Loc-king M20x2,5 (10), Part is included in kit 11255098 Attachment kit Dieci Large, 11255234 Attachment kit Dieci Medium, 11255238 Attachment kit Dieci Small, 11255241 Attachment kit JLG Deutz, 11255233 Attachment kit Schäffer type SWH, 11255326 Attachment kit Weidemann, 11255184 Attachment kit CAT TH, 11255096 Attachment kit Merlo
60081259	6	1	Pin	
60059931	7	2 PCS	Pin	D=25 L=75
5002058	8	3	Screw	M6S 8x16
	9	1	Bucket	
60089408	10	1	Cutting edge	
60081266	11	1	Hose	3/8" L=1200 9/16 90LMC 1/2GRU
60081267	12	1	Hose	3/8" L=1400 9/16 90LMC 1/2GRU
5022177	13	1	Cable tie	Red
5022179	14	1	Cable tie	Blue
5013853	15	2	Dowty washer	Tredo 1/2", Part is included in kit 60007907 Hose cpl., 9032177 Hose cpl.
5044127	16	2	Quick Coupling	1/2", Part is included in kit 60007907 Hose cpl., 9032177 Hose cpl.
5044130	17	2	Dust Cover	Part is included in kit 60007907 Hose cpl., 9032177 Hose cpl.
1123674	18	1	Warning decal	"Read manual"
1123673	19	1	Warning decal	
60056626	20	2	Decal	
60090131	21	2	Decal	

© 2025 Jost