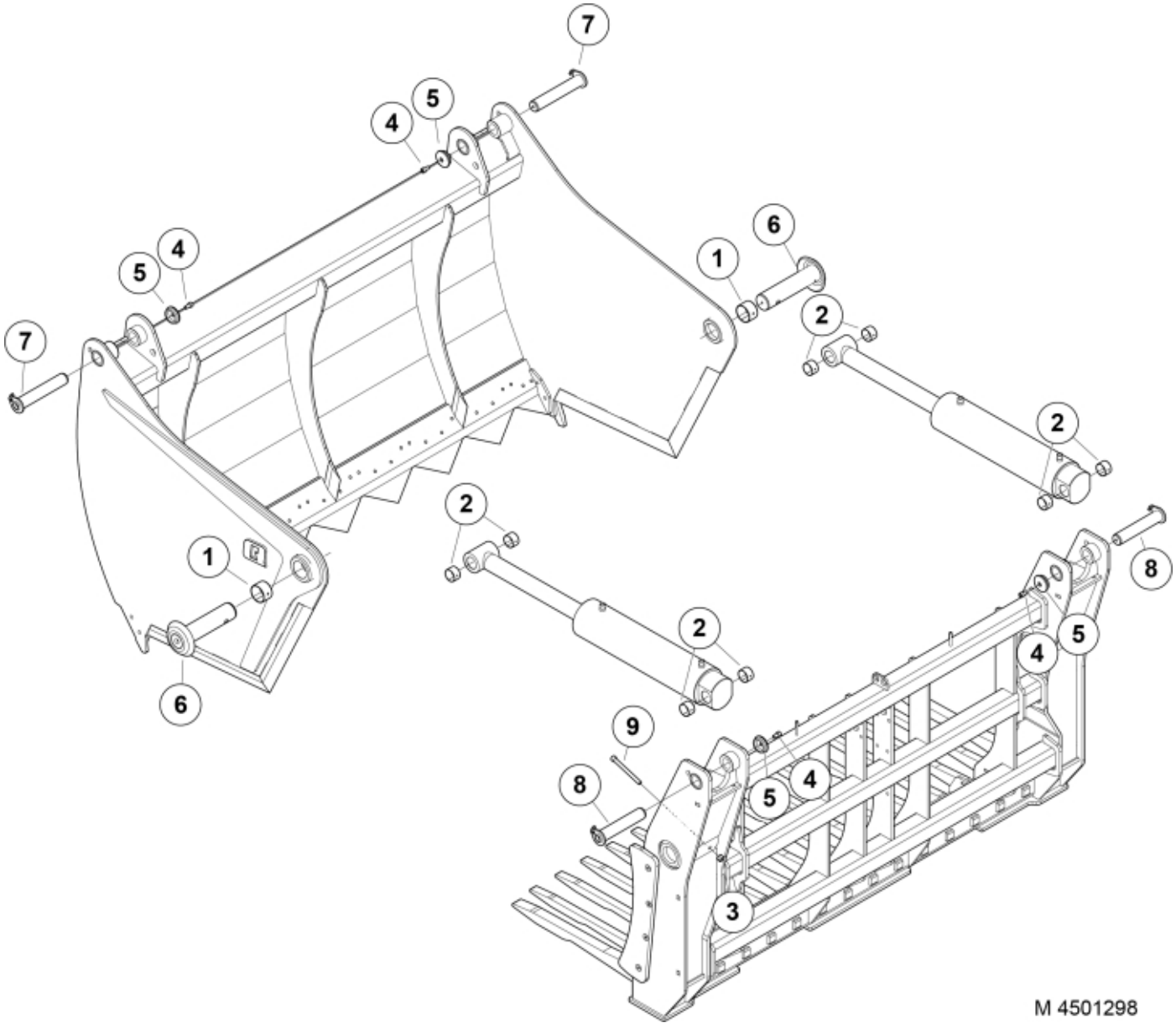

© 2025 Jost

Part assemblies Pin and bushing kit

PartNo	Pos	Qty	Name	Specifications
5051187	1	2	Bushing	
5051196	2	8	Bushing	
5011555	3	2	Nut	M12 Loc
5050608	4	4	Screw	MC6S M10x20 Loc
5215131	5	4	Locking cover	
60027947	6	2	Pin	
60030256	7	2	Pin cpl.	
60006393	8	2	Pin	
5052116	9	2	Screw	MC6S M12x130

© 2025 Jost