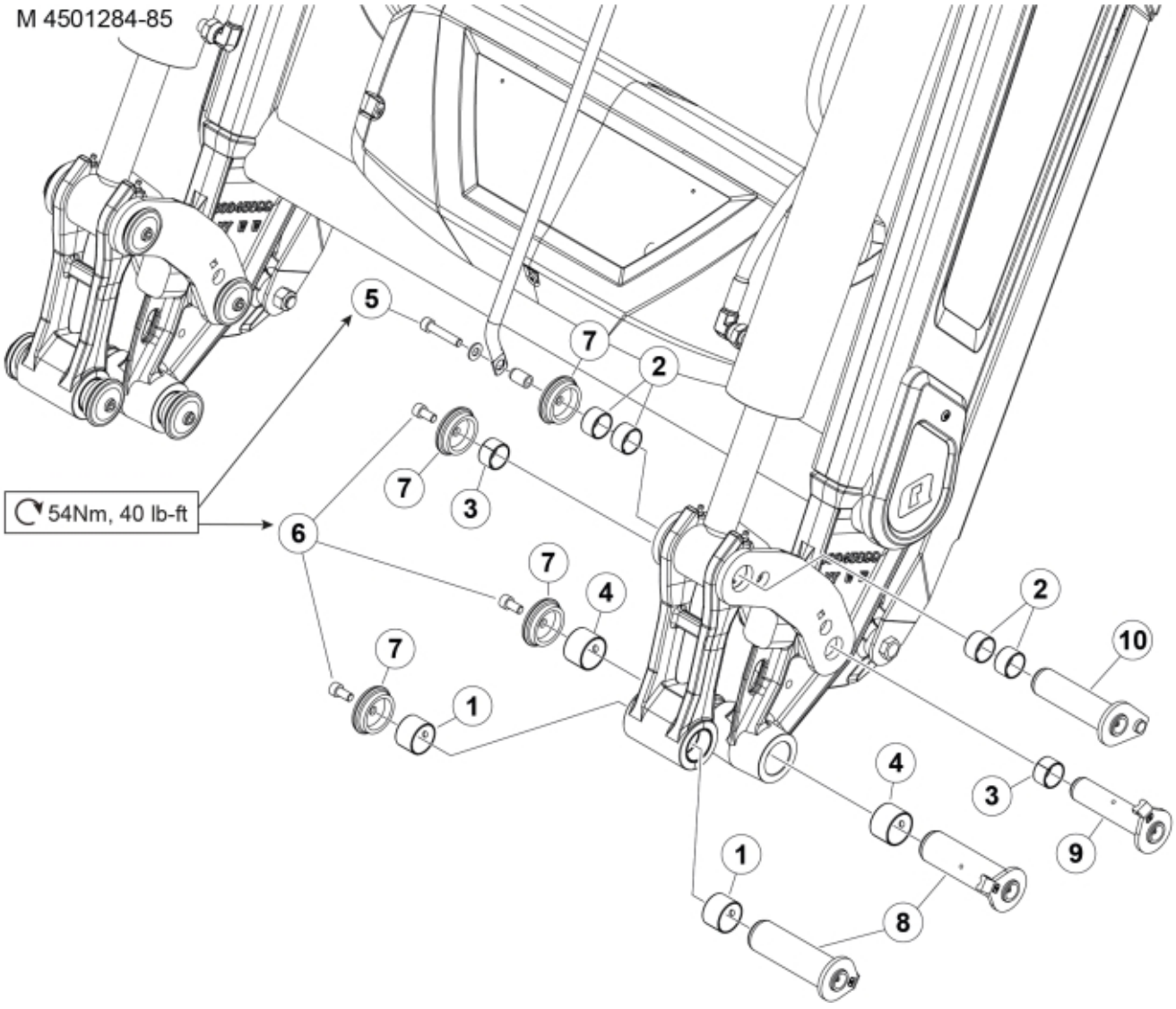

© 2025 Jost

Description	Euro, Euro/SMS, Euro/MX, Euro/Valtra, Euro/Typ3, SkidSteer
Part assemblies	Pin and bushing kit, front

PartNo	Pos	Qty	Name	Specifications
5018513	1	4	Bushing	D40 L=20
5018514	2	8	Bushing	D35 L=20
5018515	3	4	Bushing	D30 L=20
5018904	4	4	Bushing	D40 L=30
5050605	5	1	Screw	MC6S 10x50 Loc
5050608	6	7	Screw	MC6S M10x20 Loc
5215131	7	8	Locking cover	
60006415	8	4	Pin	D40 L=134
60018046	9	2	Pivot Pin	D=30, L=127mm
60003247	10	2	Pivot Pin	D=35, L=127mm

© 2025 Jost