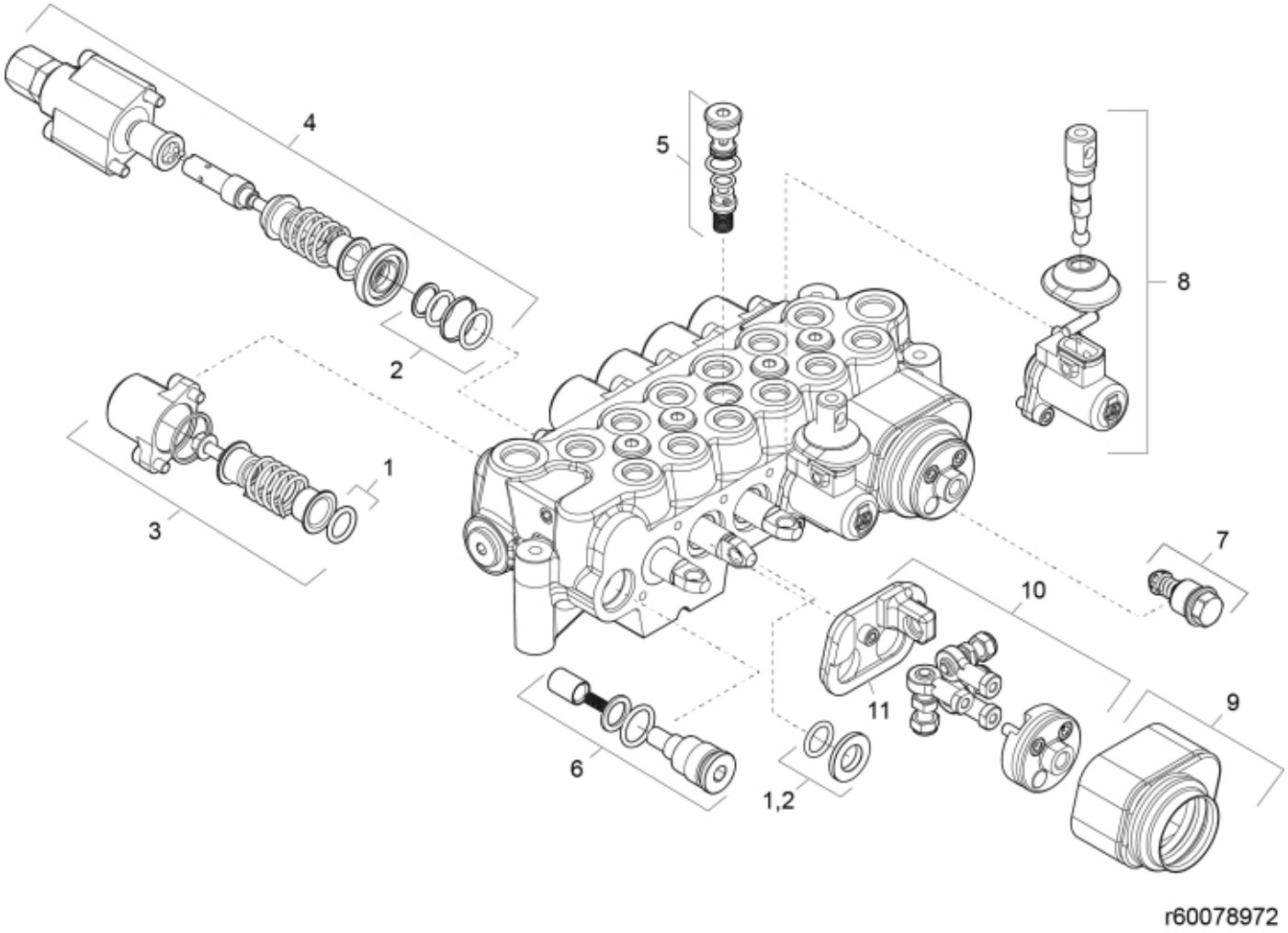

© 2025 Jost

Part assemblies Control valve

PartNo	Pos	Qty	Name	Specifications
4500023	1	5	Seal kit	Tipo 11
4500037	2	1	Seal kit	Type 69
4500020	3	1	Spool control unit cpl.	
4500026	4	5	Spool control unit cpl.	
4500021	5	5	Valve	
4500019	6	1	Plug	
4501283	7	2	Relief and anticavitation valve	
4500044	8	2	Joystick mechanism cpl.	
4501193	9	2	Bellows	
4501292	10	2	Joystick mechanism cpl.	
4501293	11	1	• Plate	

© 2025 Jost