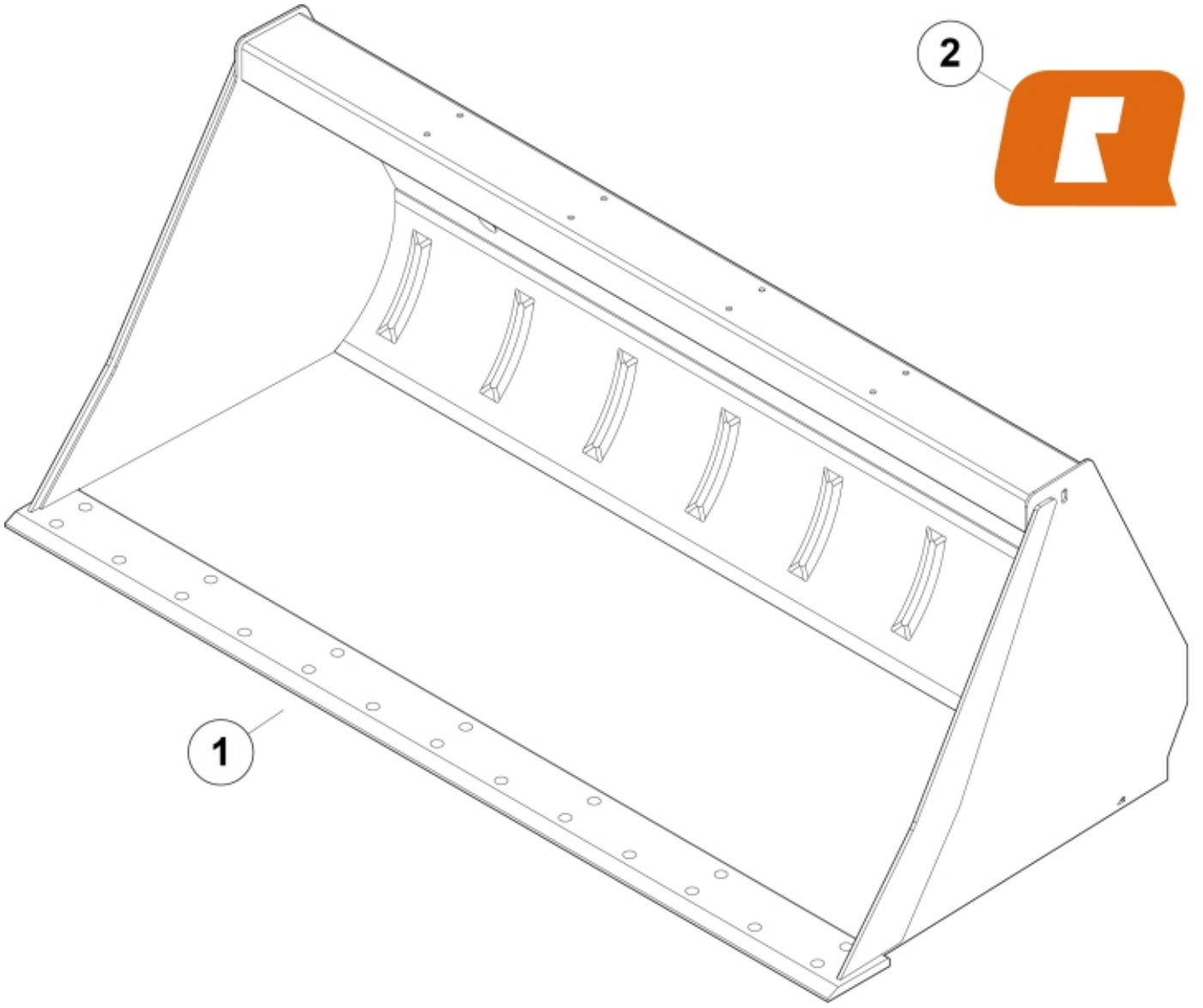

r11256096-097-098-154-155-271-272-273

© 2025 Jost

Part assemblies	Bucket SM+ 180
Specification	Year From: 12/1/2022 12:00:00 AM

PartNo	Pos	Qty	Name	Specifications
11256155		1	Bucket SM+ 180	12/1/2022 12:00:00 AM
60046985	1	1 PCS	Cutting edge	
60056616	2	2	Decal	"Q" medium 110mm
5022119		2	Plug	

© 2025 Jost