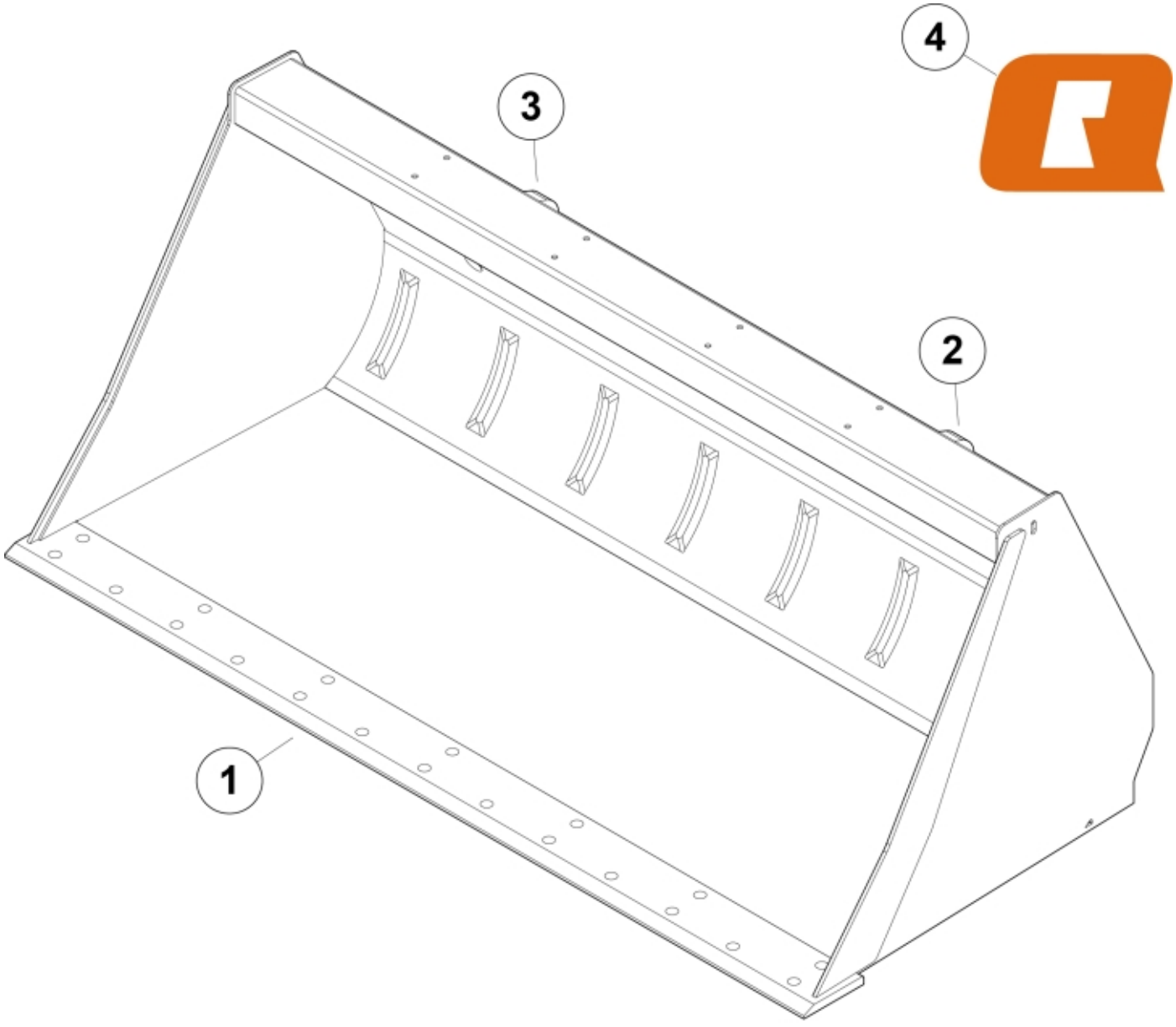

r11256159-160-120-353-354-355

© 2025 Jost

Part assemblies	Bucket SM+ 180 Euro
Specification	Year From: 12/1/2022 12:00:00 AM

PartNo	Pos	Qty	Name	Specifications
60046985	1	1 PCS	Cutting edge	
60071890	2	1	Implement hook LH	
60071889	3	1	Implement hook RH	
60056616	4	2	Decal	"Q" medium 110mm
5022119		2	Plug	

© 2025 Jost