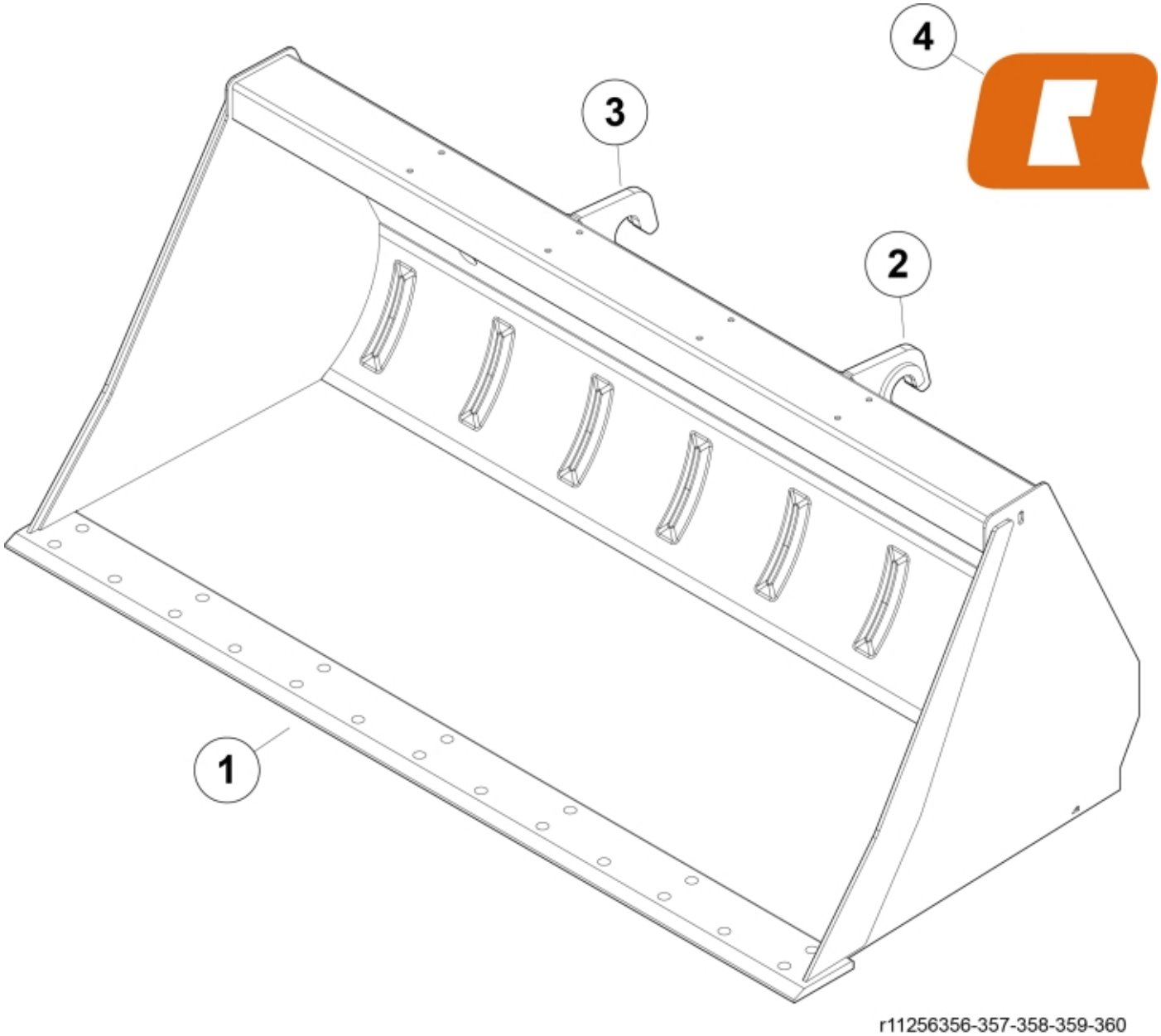

r11256356-357-358-359-360

© 2025 Jost

Part assemblies	Bucket SM+ 220 SMS
Specification	Year From: 12/1/2022 12:00:00 AM

PartNo	Pos	Qty	Name	Specifications
11256359		1	Bucket SM+ 220 SMS	12/1/2022 12:00:00 AM
60046969	1	1 PCS	Cutting edge	
60085726	3	1	Implement hook LH	SMS
60085724	3	1	Implement hook RH	SMS
60056616	4	2	Decal	"Q" medium 110mm
5022119		2	Plug	

© 2025 Jost