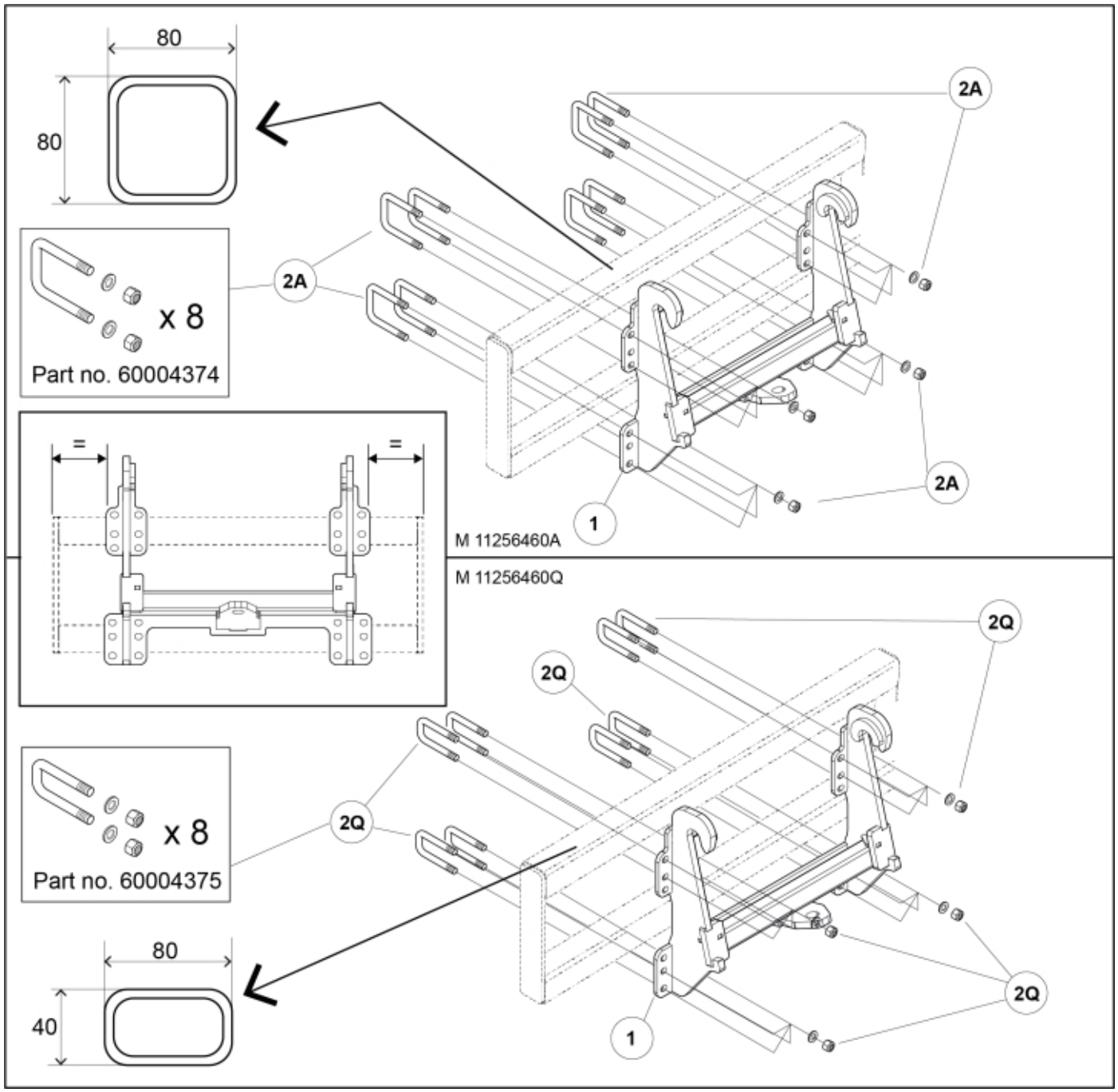
80
80
x 8
Part no. 60004374
2A
2A
2A
1
M 11256460A
M 11256460Q
2Q
2Q
x 8
Part no. 60004375
2Q
2Q
1
80
40

© 2025 Jost

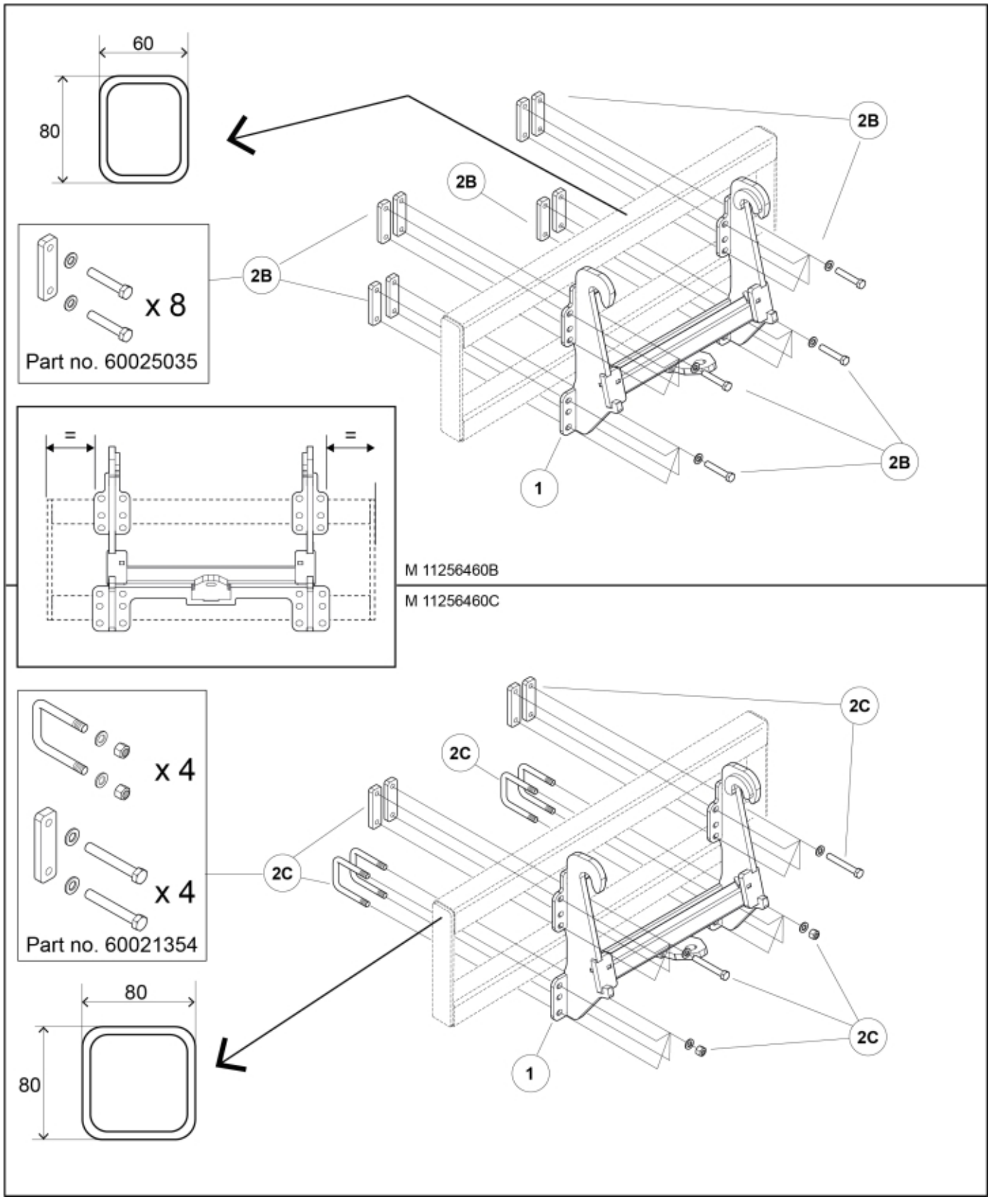
60
80
2B
2B
2B
2B
x 8
Part no. 60025035
1
=
=
M 11256460B
M 11256460C
2C
2C
2C
2C
x 4
x 4
Part no. 60021354
1
80
80

© 2025 Jost

11256460A
11256460Q

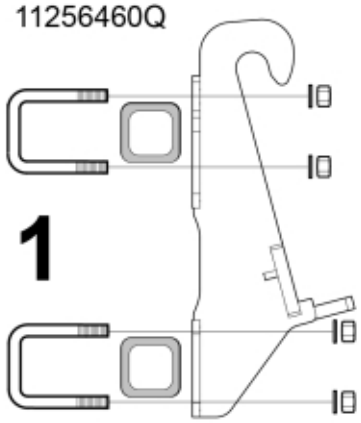

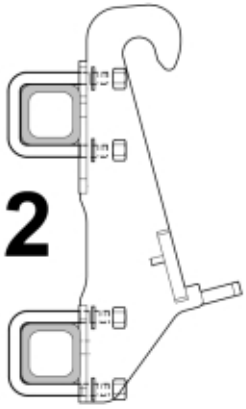

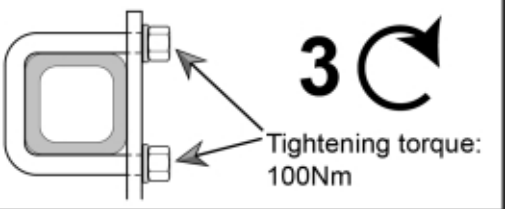

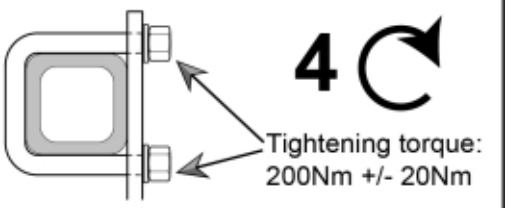

11256460B

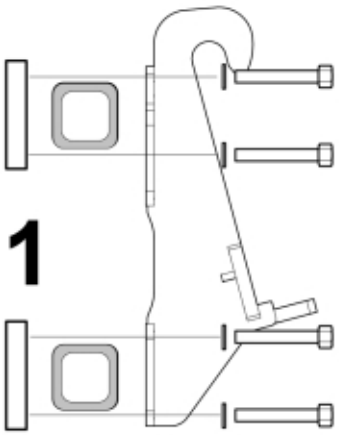

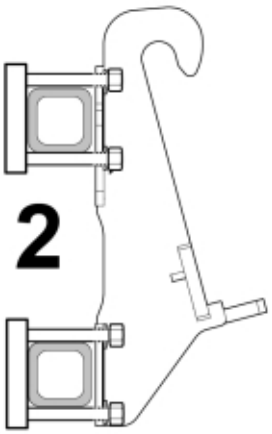





11256460C

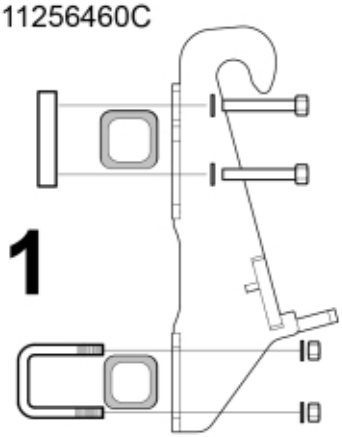

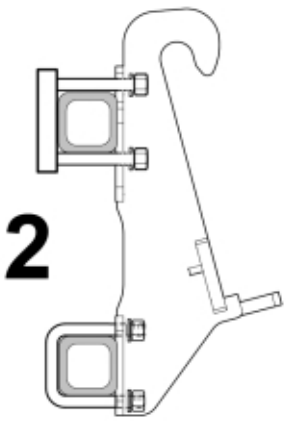

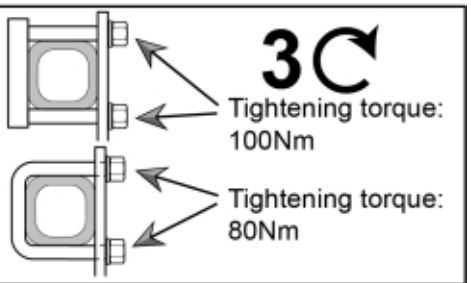

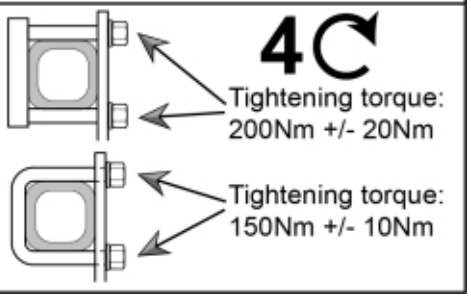

© 2025 Jost

Part assemblies Attachment kit Merlo ZM2S

PartNo	Pos	Qty	Name	Specifications
11256460		1	Attachment kit Merlo ZM2S	
60090153	1	1	Attachment Merlo ZM2S	
60004374	2A	1 PCS	Bolt kit	
60020469		8	• U-bolt	80x80 M16 (60003288)
5013105		16	• Washer	BRB 17 x 30 x 3 300HV
5011557		16	• Nut	Loc-King M16
60004375	2Q	1 PCS	Bolt kit	
60020468		8 PCS	• U-bolt	80x40 M16 (60003289)
5013105		16	• Washer	BRB 17 x 30 x 3 300HV
5011557		16	Nut	Loc-King M16
60025035	2B	1 PCS	Bolt kit	
60050544		8 PCS	• Plate	
5050888		16	• Screw	M6S M16x90 10.9
5013105		16	• Washer	BRB 17 x 30 x 3 300HV
60021354	2C	1 PCS	Bolt kit	
60050544		4 PCS	• Plate	
5050810		8	• Screw	M6S M16x120
5013105		16	• Washer	BRB 17 x 30 x 3 300HV
60020469		4	• U-bolt	80x80 M16 (60003288)
5011557		8	• Nut	Loc-King M16

© 2025 Jost