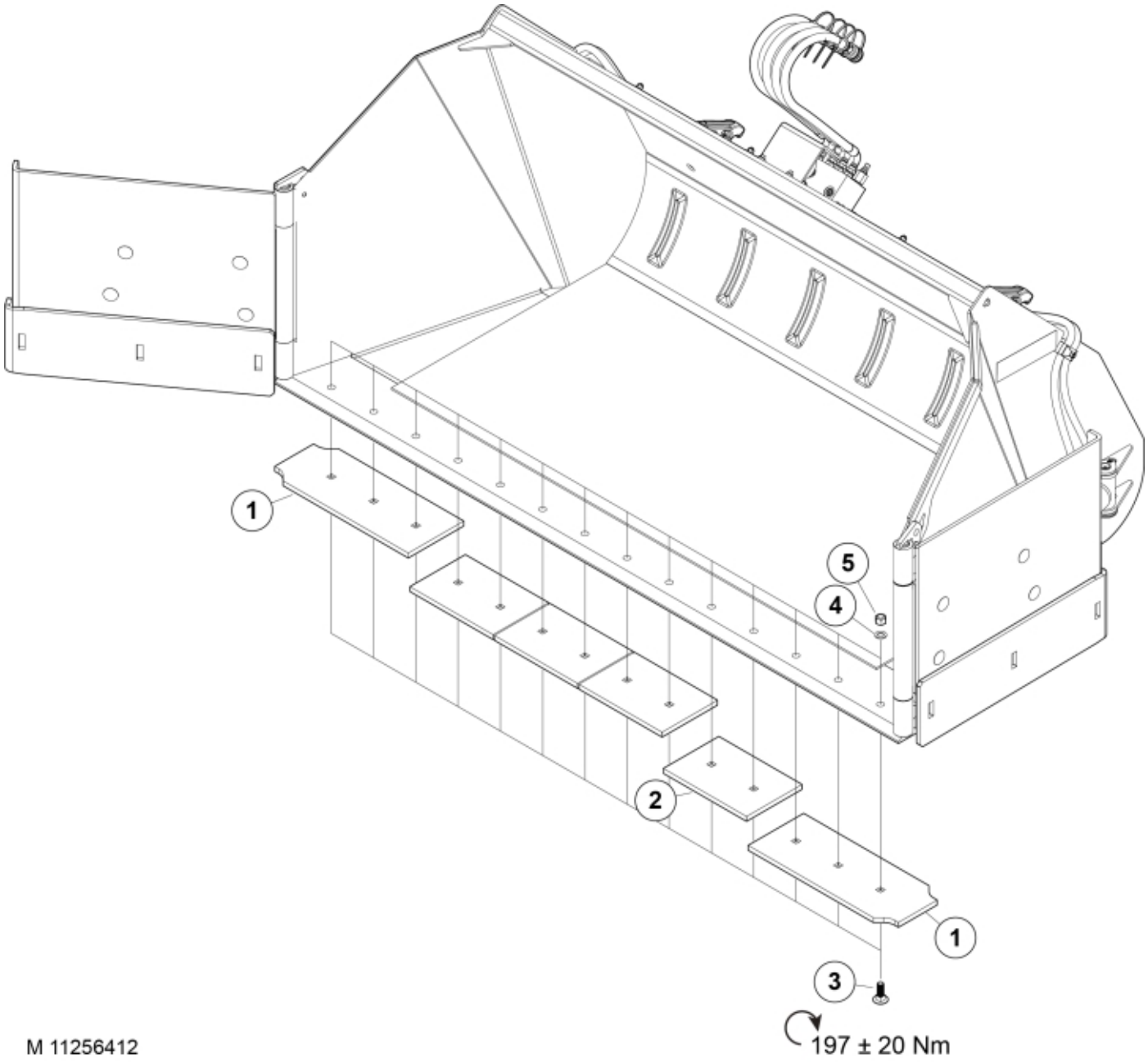

M 11256412

© 2025 Jost

Part assemblies Cutting edge kit

PartNo	Pos	Qty	Name	Specifications
11256412		1	Cutting edge kit	
60022285-22	1	2 PCS	Cutting edge	Replaces 60000487
60022288-22	2	1 PCS	Cutting edge	Replaces 60000488
5006035	3	14 PCS	Screw	MVBF M16x50
5013105	4	14	Washer	BRB 17 x 30 x 3 300HV
5011557	5	14	Nut	Loc-King M16

© 2025 Jost