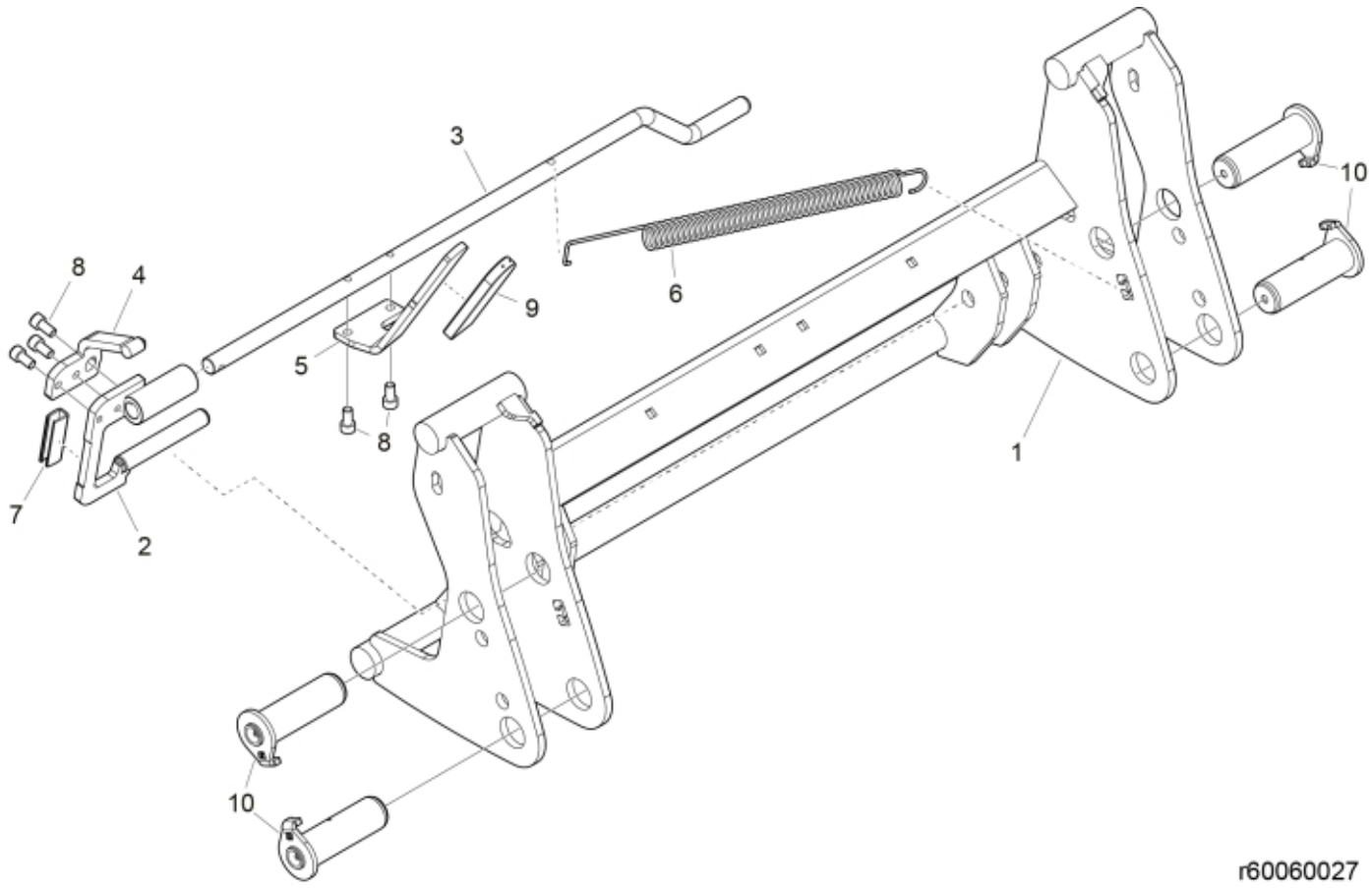

© 2025 Jost

Part assemblies Euro

PartNo	Pos	Qty	Name	Specifications
60059990-19	1	1	Tool carrier	MF Red
60060028	2	1	Handle	
60060056	3	1	Rod	
60095052	4	1	Locking plate	
60060093	5	1	Handle	
60010817	6	1	Spring	
60039148	7	1	Plastic handle	
5050608	8	5	Screw	MC6S M10x20 Loc
5022144	9	1	Cover	
60018062	10	4	Pivot Pin	D=40, L=127mm

© 2025 Jost