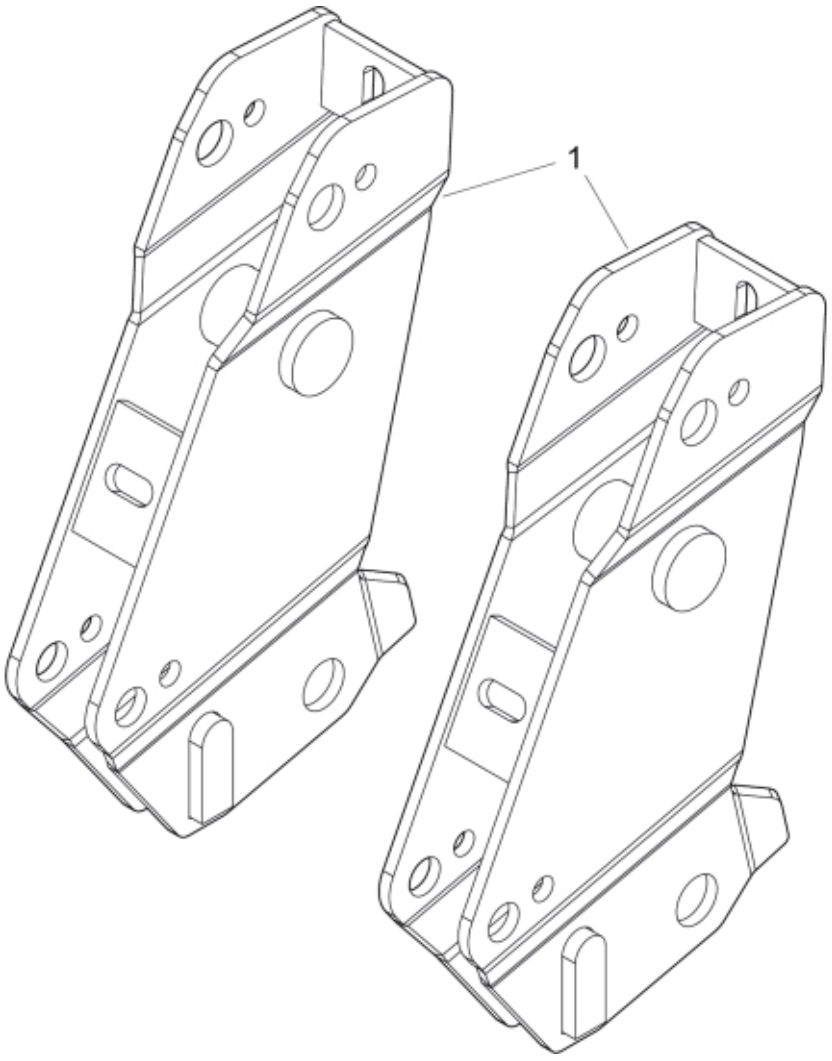

r60073952

© 2025 Jost

Description	NSL
Part assemblies	Bearing box

PartNo	Pos	Qty	Name	Specifications
60073952-19	1	2	Bearing box	MF Red

© 2025 Jost