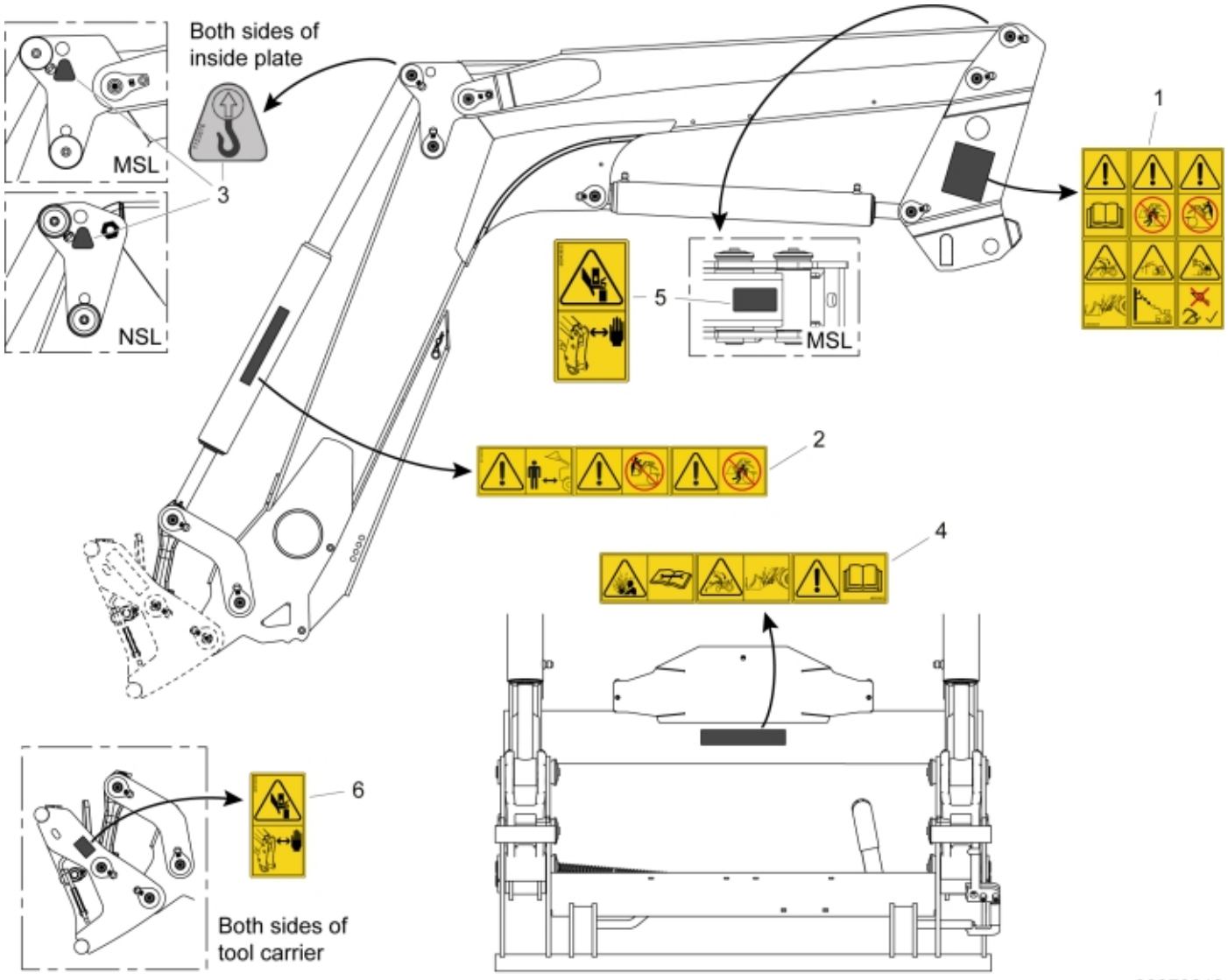
Both sides of
inside plate
MSL
NSL
3
1
5
MSL
2
4
6
Both sides of
tool carrier
r60079619

© 2025 Jost

Part assemblies Warning decals

PartNo	Pos	Qty	Name	Specifications
60042633	1	1 PCS	Warning decal	
60120530	2	2	Warning decal	
1123676	3	2	Decal, lift	
60042635	4	1 PCS	Warning decal	
60043833	5	1 PCS	Warning decal	
60129985	6	2	Warning decal	

© 2025 Jost