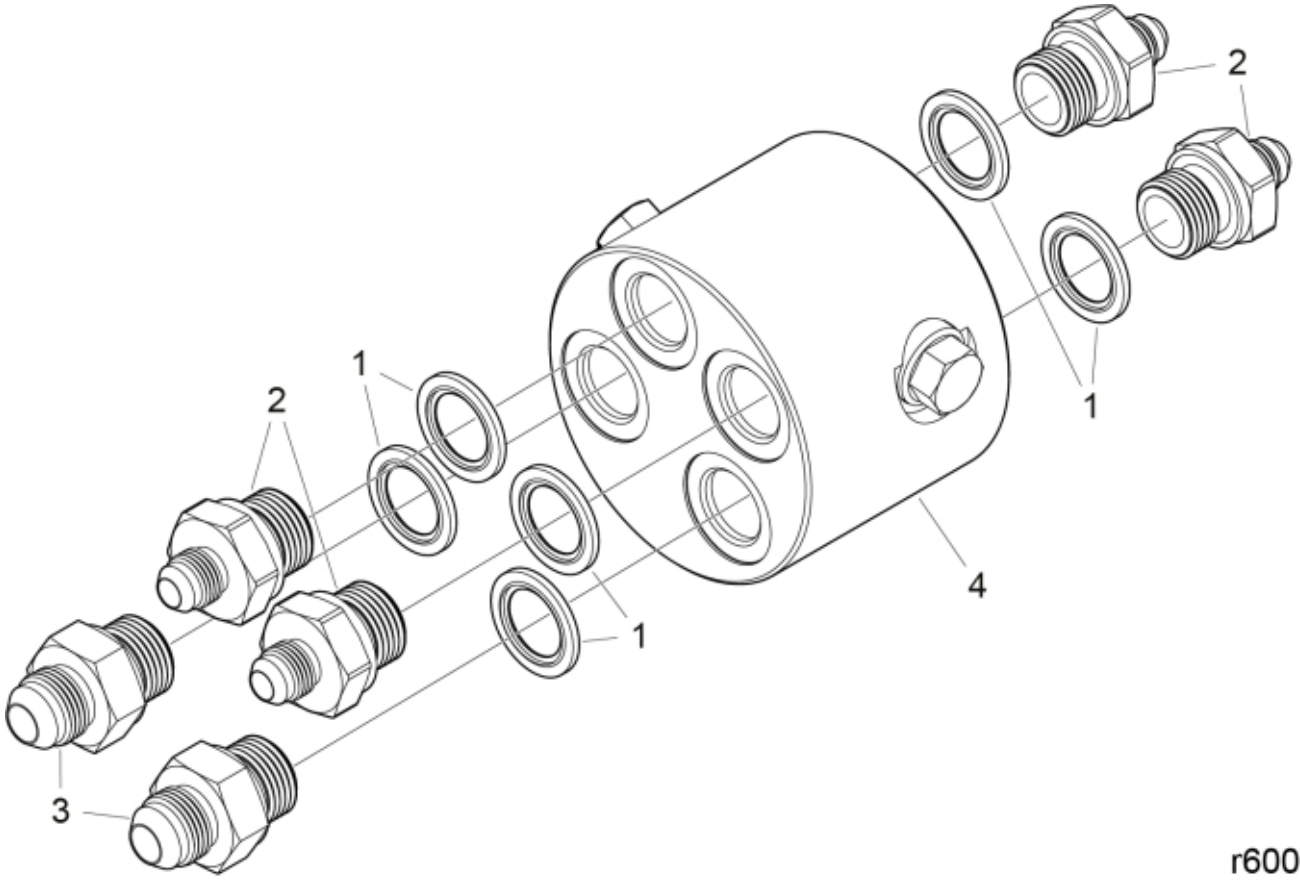

r60063814

© 2025 Jost

Description	Tilt
Part assemblies	Block cpl

PartNo	Pos	Qty	Name	Specifications
5013853	1	6	Dowty washer	Tredo 1/2", Part is included in kit 60007907 Hose cpl., 9032177 Hose cpl.
5051985	2	4 PCS	Adaptor	JIC 9/16-G1/2"
5027417	3	2	Adaptor	3/4" JIC 37-G1/2"
60063745	4	1	Block	Tilt

© 2025 Jost