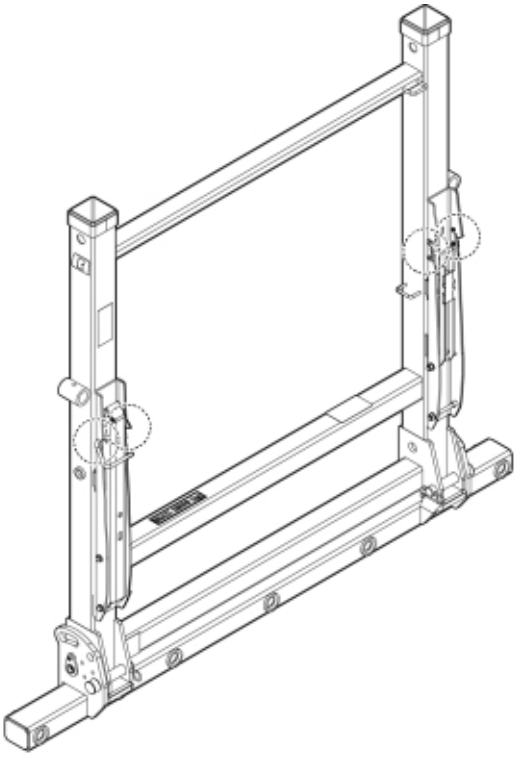

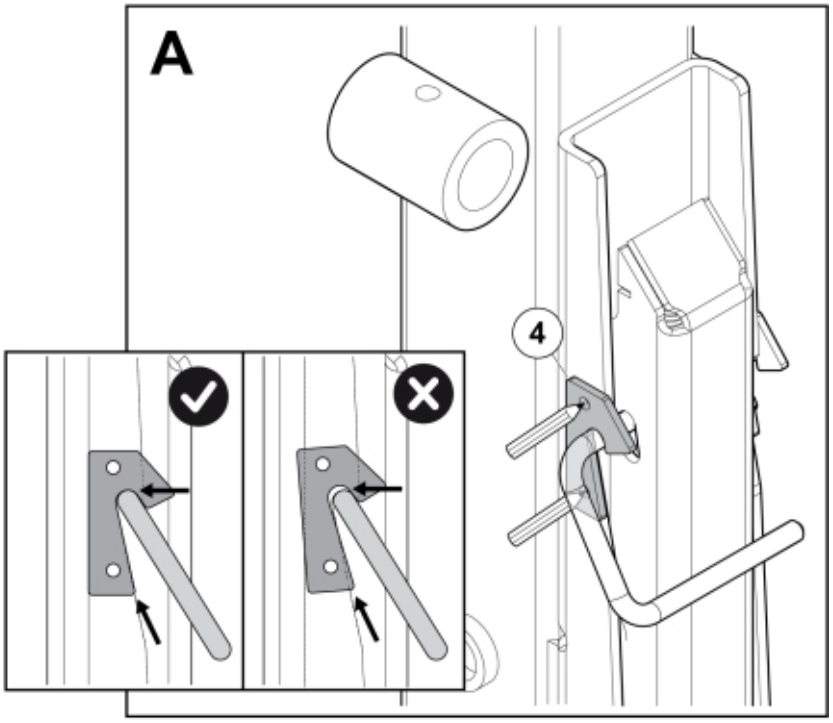

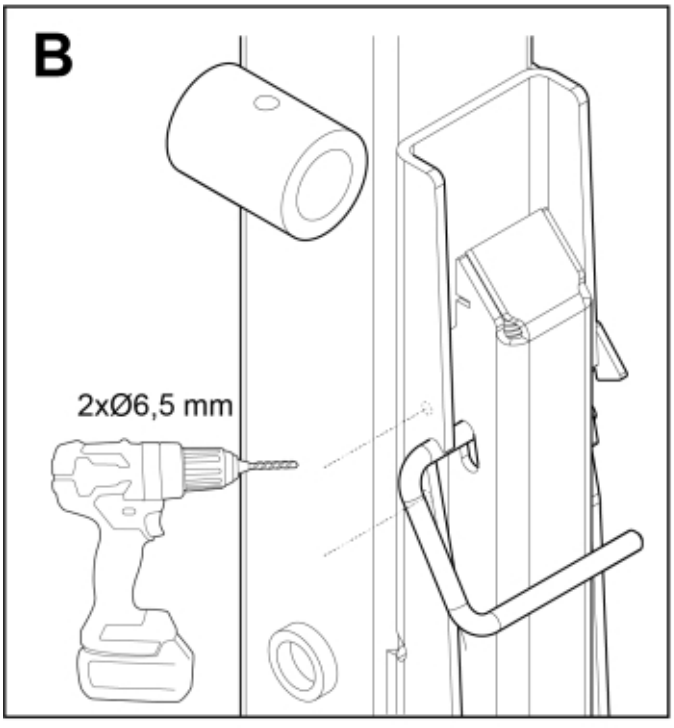

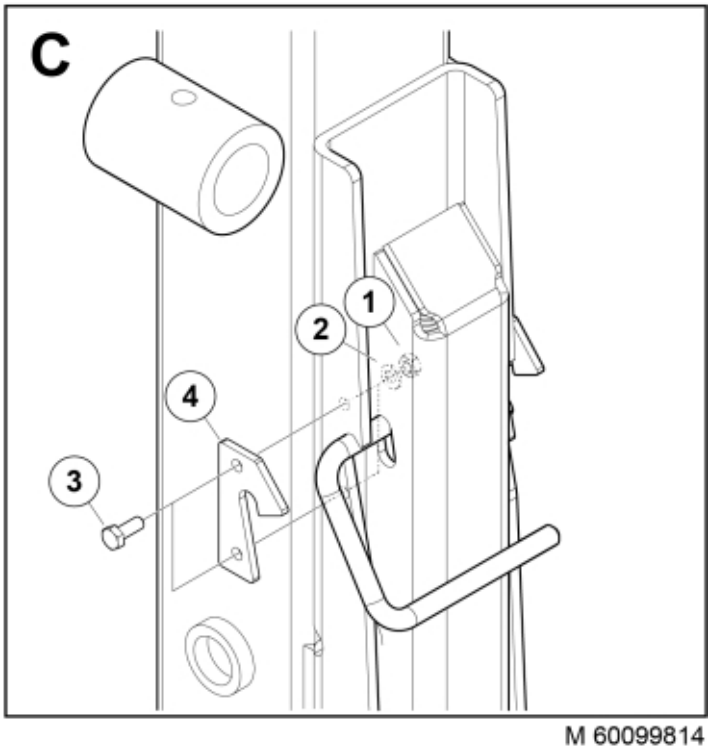

M 60099814

© 2025 Jost

Part assemblies Repair Kit

PartNo	Pos	Qty	Name	Specifications
5011052	1	8 PCS	Nut	M6M M6
5013108	2	8	Washer	BRB 6,4 x 12 x 1,5
5002030	3	8	Screw	M6S M6x16 (8.8)
60099801	4	4	Plate	

© 2025 Jost