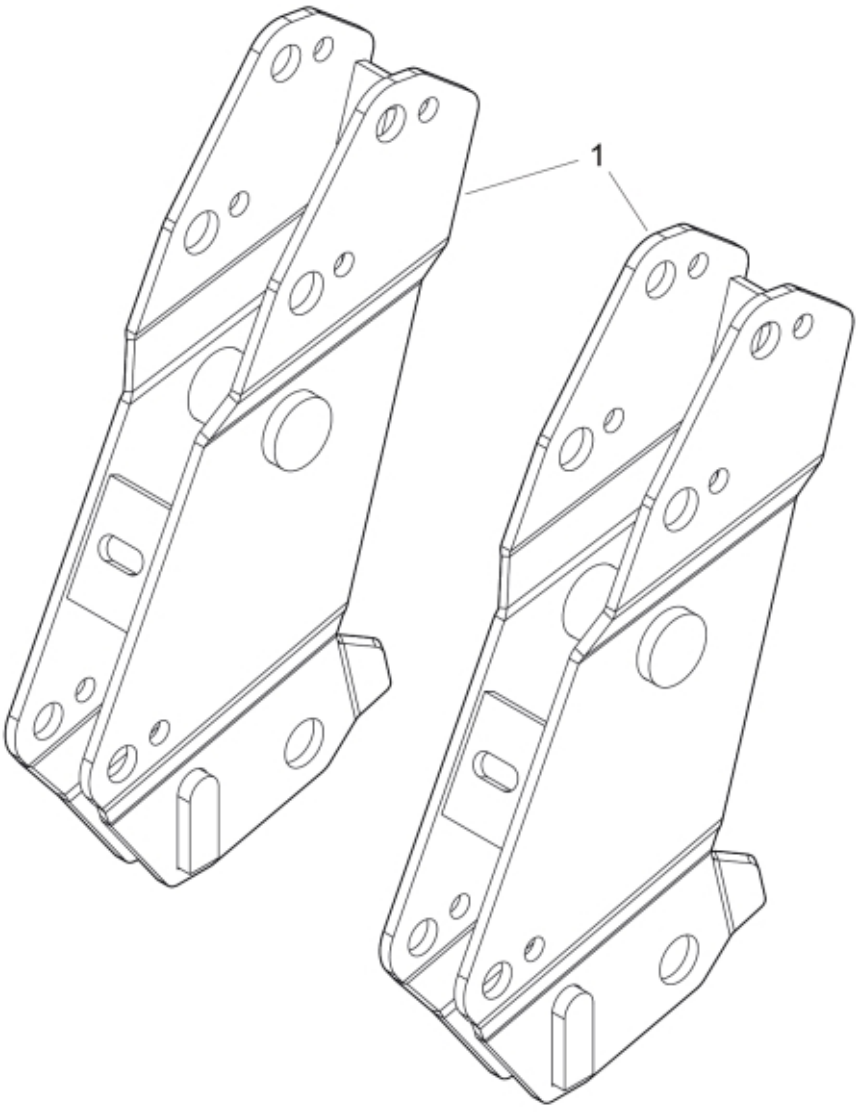

r60056144

© 2025 Jost

Description	MSL
Part assemblies	Bearing box

PartNo	Pos	Qty	Name	Specifications
60056144-17	1	2	Bearing box	

© 2025 Jost