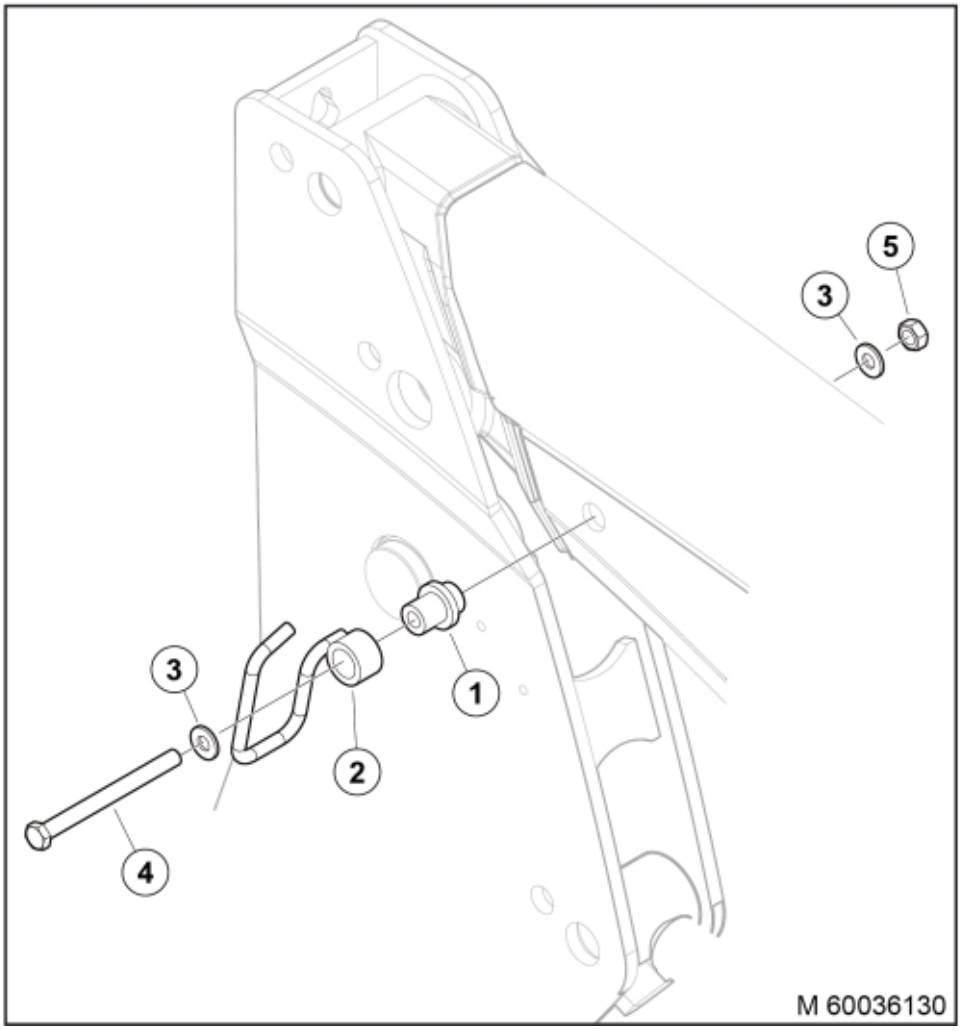

© 2025 Jost

Part assemblies Hose guide

PartNo	Pos	Qty	Name	Specifications
60036131	1	1 PCS	Spacer	
60036314	2	1 PCS	Hose guide	
5013110	3	2	Washer	BRB 10.5x22x2
5002091	4	1	Screw	M6S 10x120
5011054	5	1	Nut	M6M M10

© 2025 Jost