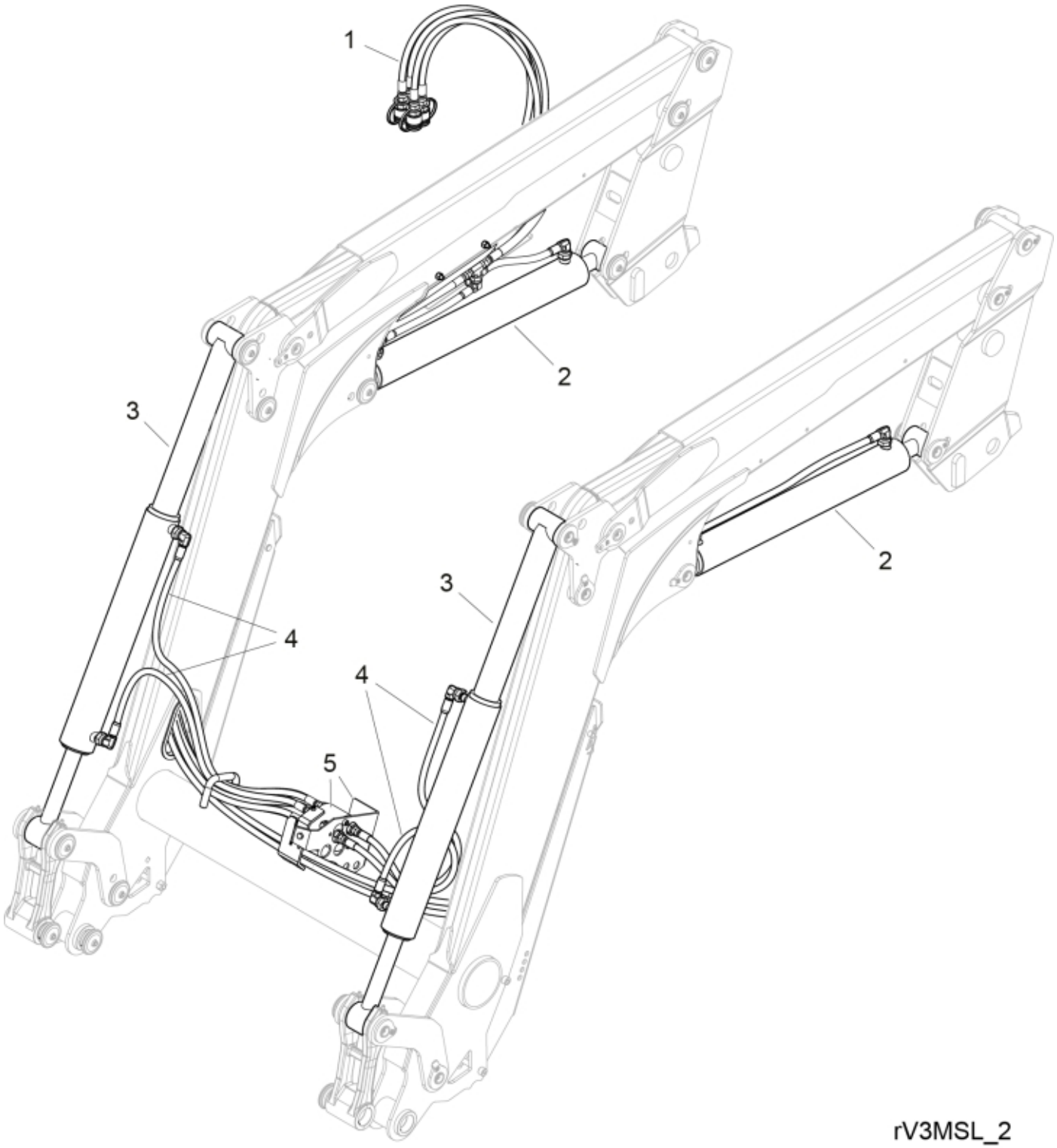

© 2025 Jost

Part assemblies Hydraulics

PartNo	Pos	Qty	Name	Specifications
- - -	1	1	Main hose kit	See separate part list
60098105-1	2	2	Lift Cylinder	
60098096-1	3	2	Tilt Cylinder	
60076377	4	4	Hose	3/8"
- -	5	1	Central Valve Units (CVU)	See separate part list

© 2025 Jost