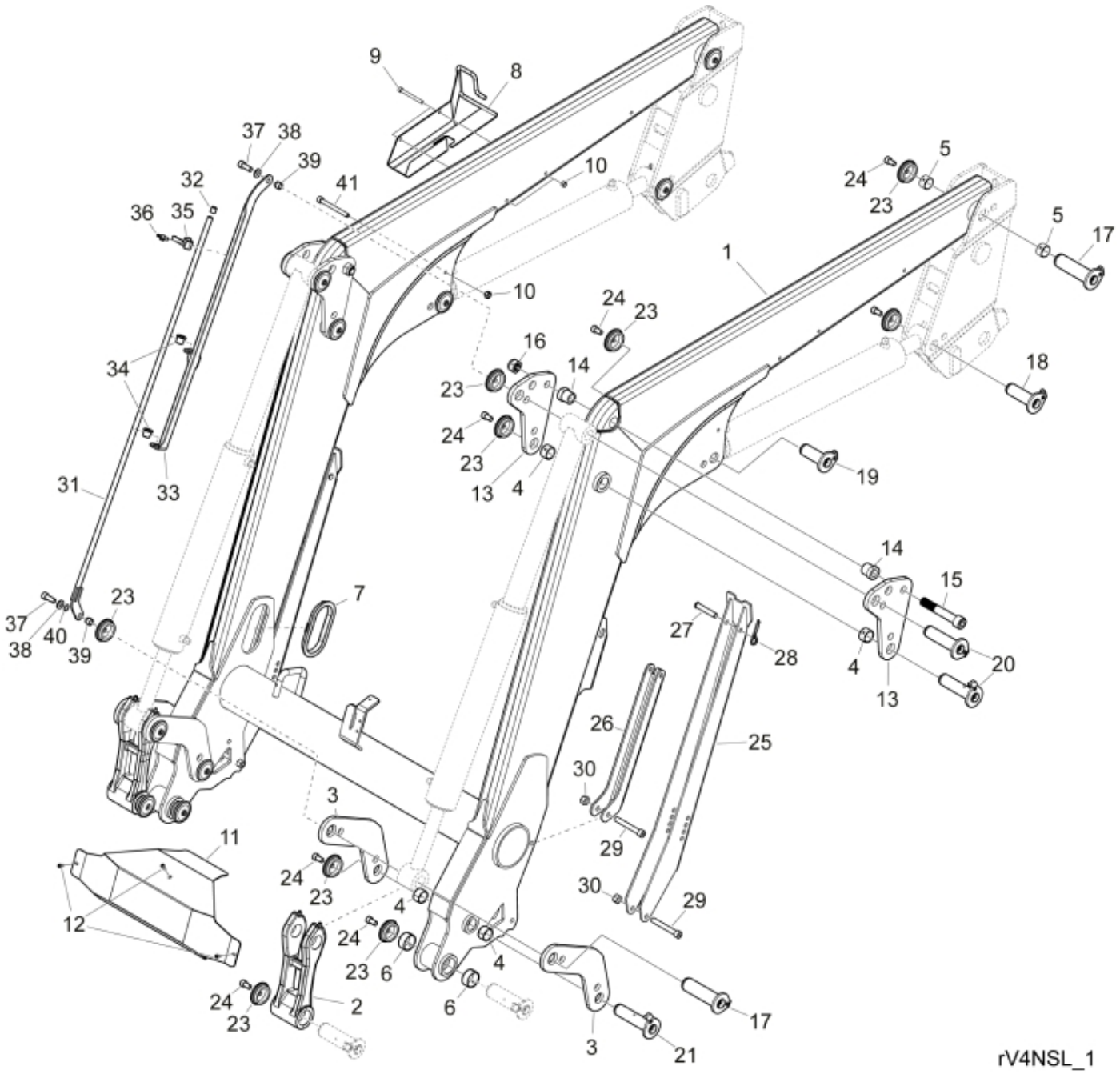

© 2025 Jost

Part assemblies Loader beam

PartNo	Pos	Qty	Name	Specifications
60055238-17	1	1	Loader beam	Black Texture
60018637	2	2	Link w. bushings	Glossy Black
60055298-17	3	4	Link	Black Texture
5018515	4	8	Bushing	D30 L=20
5018514	5	4	Bushing	D35 L=20
5018513	6	4	Bushing	D40 L=20
60061347	7	2	Edge cover	
60054871-17	8	1	Bracket	Black Texture
5004054	9	2	Screw	MC6S M8x80
5011553	10	3	Nut	M6M M8 Loc-king
60075838-17	11	1	Cover plate	Black Texture
5004033	12	3	Screw	MC6S M6 x 12
60112043-17	13	4	Cylinder attachment	Black Texture
60056131	14	4	Sleeve	
5051848	15	2	Screw	MC6S M10x20 Loc
5011924	16	2	Locking nut	Loc-king M20x2,5 (10)
60018053	17	4	Pivot Pin	D=35, L=127mm
60018047	18	2	Pivot Pin	D=30, L=96mm
60018050	19	2	Pivot Pin	D=30, L=84mm
9020057	20	4 PCS	Pivot Pin	D=30, L=118mm
60018046	21	2	Pivot Pin	D=30, L=127mm
5215131	23	18	Locking cover	
5050608	24	16	Screw	MC6S M10x20 Loc
60087599-17	25	2	Support leg	Black Texture
60044545-17	26	2	Stay	Black Texture
5051984	27	2	Locking Pin	
5221186	28	2	Pin clip	□ 12x120
5052133	29	4	Screw	MC6S M12x19
5011555	30	4	Nut	M12 Loc
60079526	31	1	Indicator rod	
60078607	32	1	Cap	
60075601	33	1	Indicator plate	
60087024	34	2	Bushing	
60088856	35	1	Clamp	
5052274	36	1	Wing screw	M6X12
5052207	37	2	Screw	MC6S M10x30 Loc
5013110	38	2	Washer	BRB 10.5x22x2
60074911	39	2	Sleeve	16X10X13
5052465	40	1	O-ring	
5004939	41	1 PCS	Screw	MC6S 8x90

© 2025 Jost