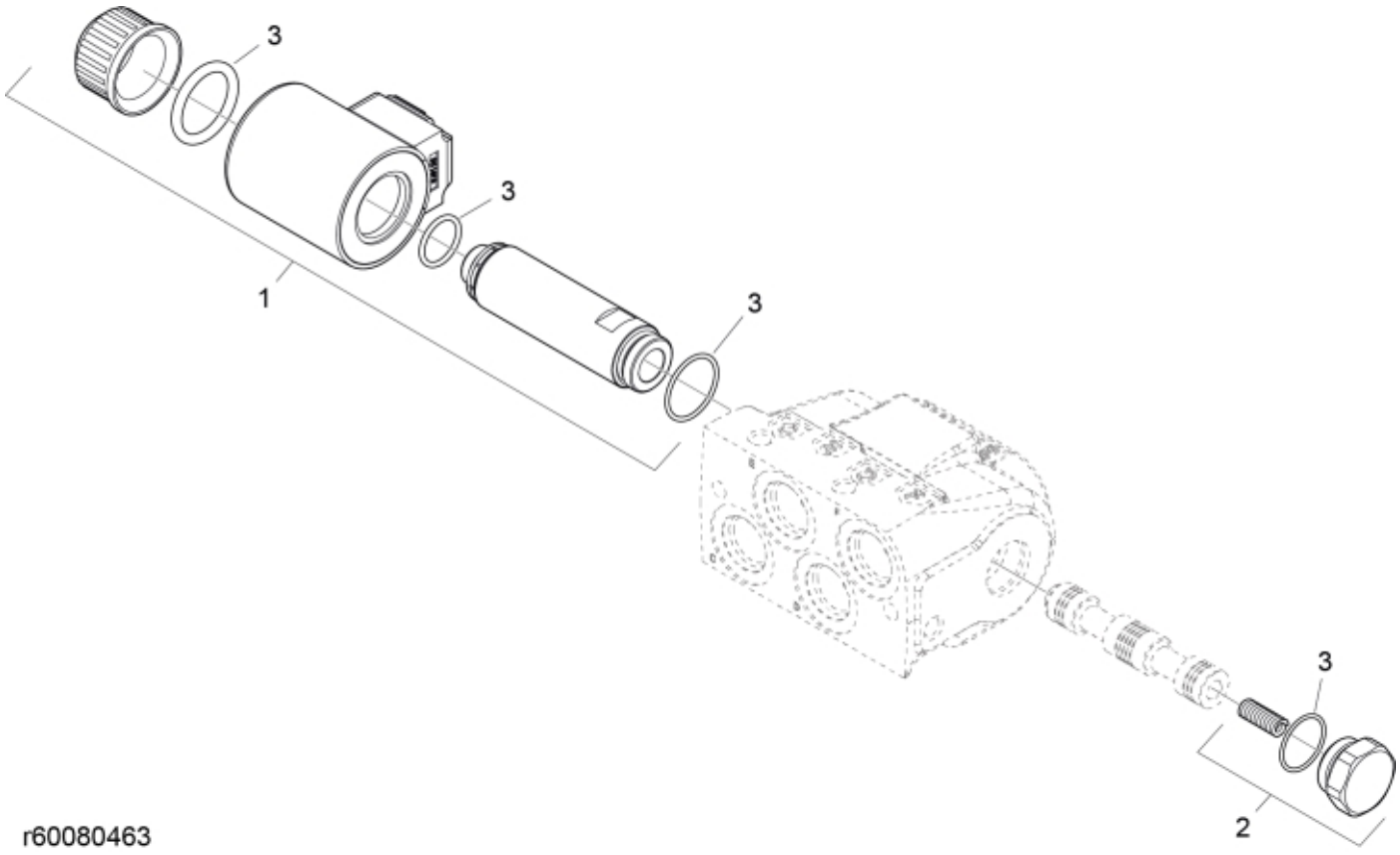

r60080463

© 2025 Jost

Part assemblies Selector valve

PartNo	Pos	Qty	Name	Specifications
59018700	1	1	Solenoid cpl.	
59018701	2	1	Spring Kit	
59018702	3	1	Seal kit	

© 2025 Jost