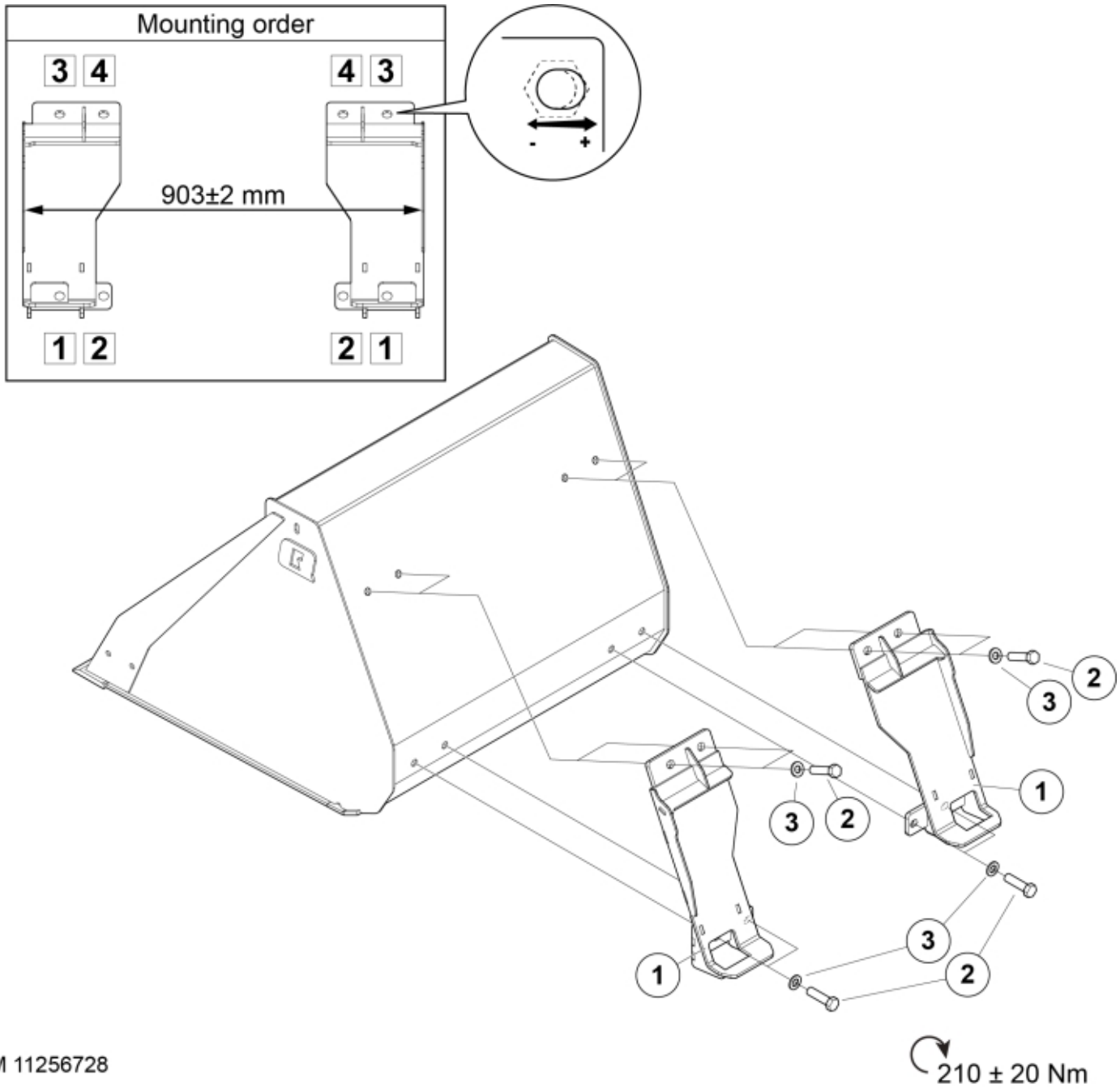
Mounting order
3 4
4 3
903±2 mm
1 2
2 1
- +
2
3
1
3 2
3
2
1
M 11256728
210 ± 20 Nm

© 2025 Jost

Part assemblies Attachment kit Skidsteer

PartNo	Pos	Qty	Name	Specifications
60069626	1	1	Attachment Skidsteer	
60047988		1	Bolt kit	M16
5002153	2	8	• Screw	M6S M16 x 45
5051493	3	8	• Washer	M16

© 2025 Jost