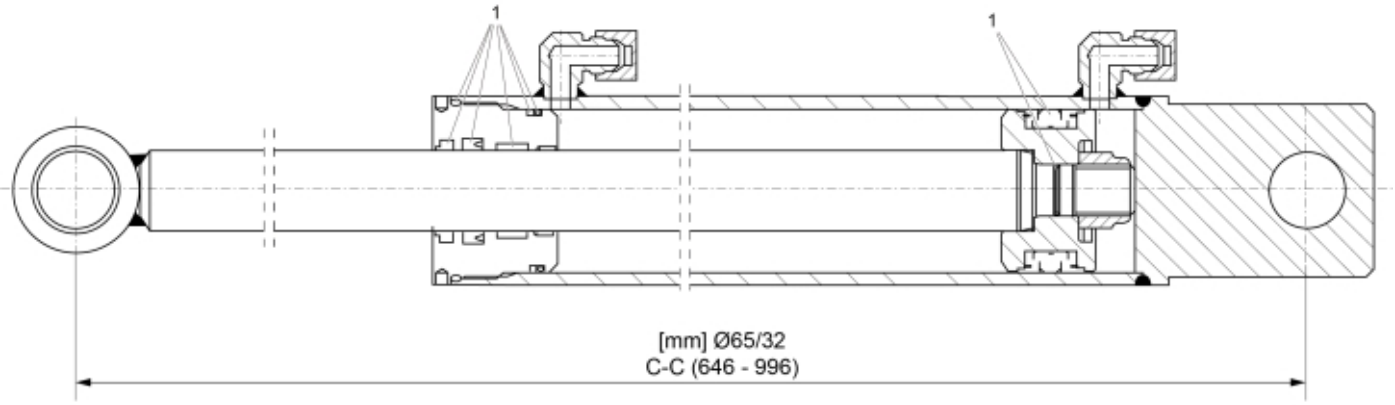

r60065288

© 2025 Jost

Description	65/32
Part assemblies	Cylinder

PartNo	Pos	Qty	Name	Specifications
4501399	1	1	Seal kit	

© 2025 Jost