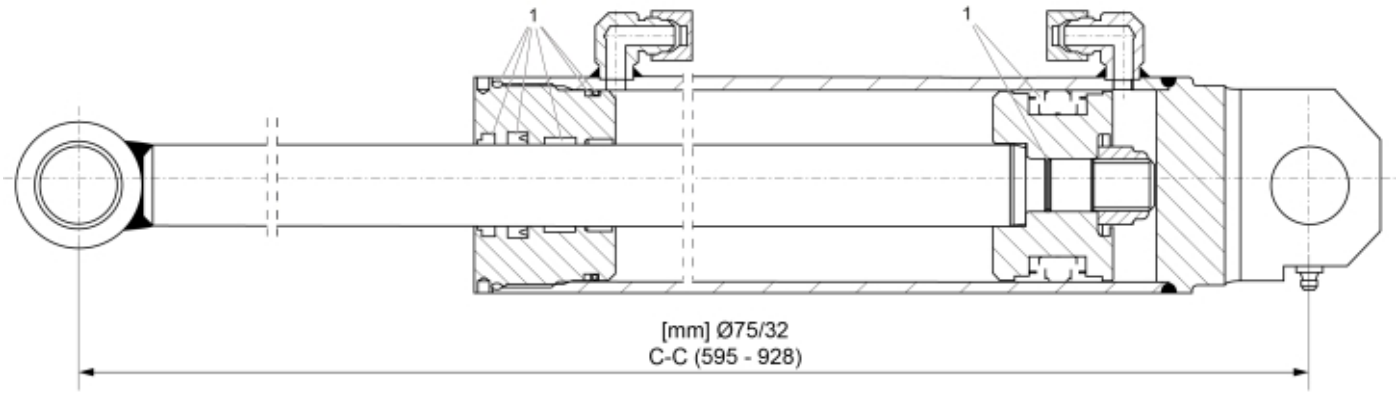

r60083811

© 2025 Jost

Description	75/32
Part assemblies	Cylinder

PartNo	Pos	Qty	Name	Specifications
4501393	1	1	Seal kit	

© 2025 Jost