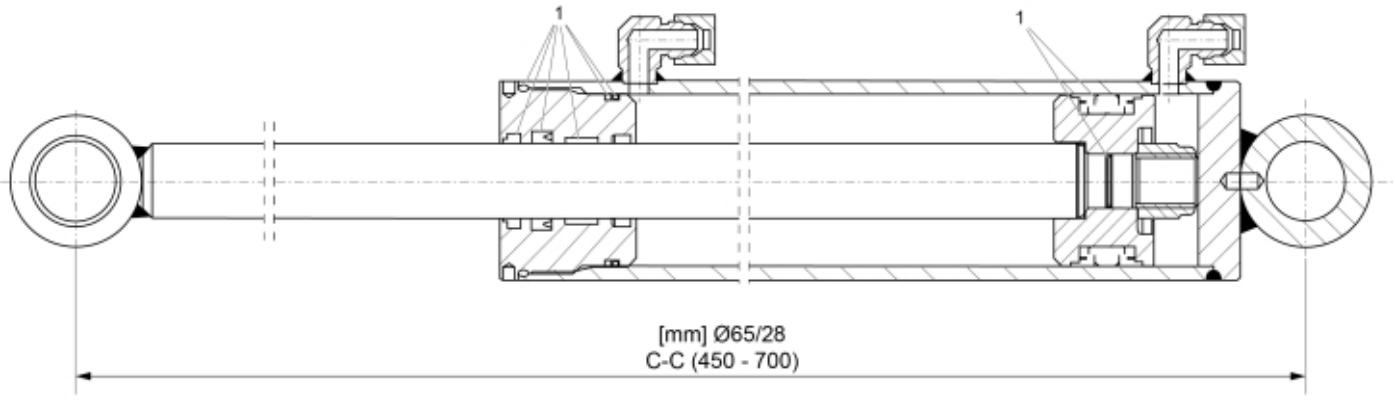

r60083812

© 2025 Jost

Description	65/28
Part assemblies	Cylinder

PartNo	Pos	Qty	Name	Specifications
4501388	1	1	Seal kit	

© 2025 Jost