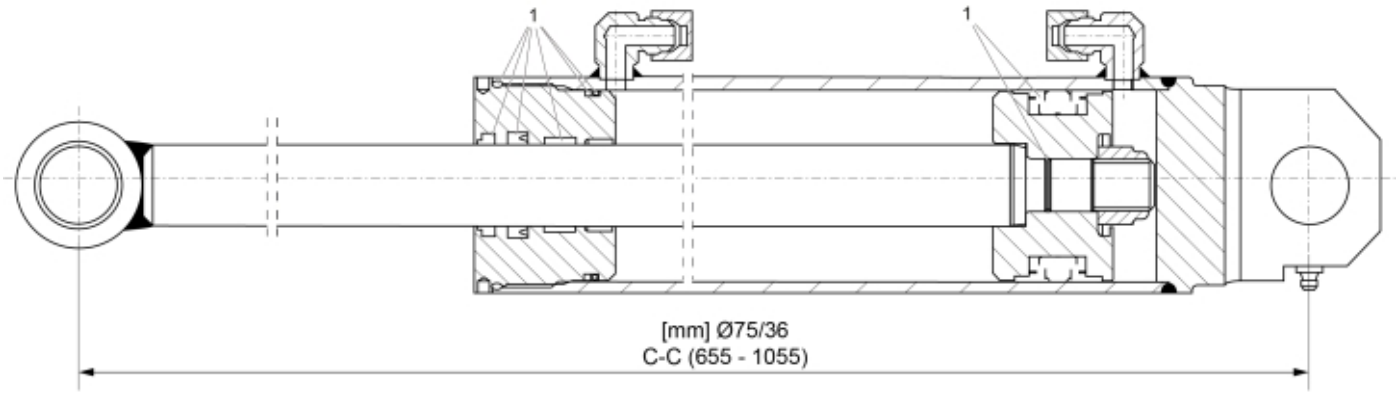

r60068202

© 2025 Jost

Description	75/36
Part assemblies	Cylinder

PartNo	Pos	Qty	Name	Specifications
4501394	1	1	Seal kit	

© 2025 Jost