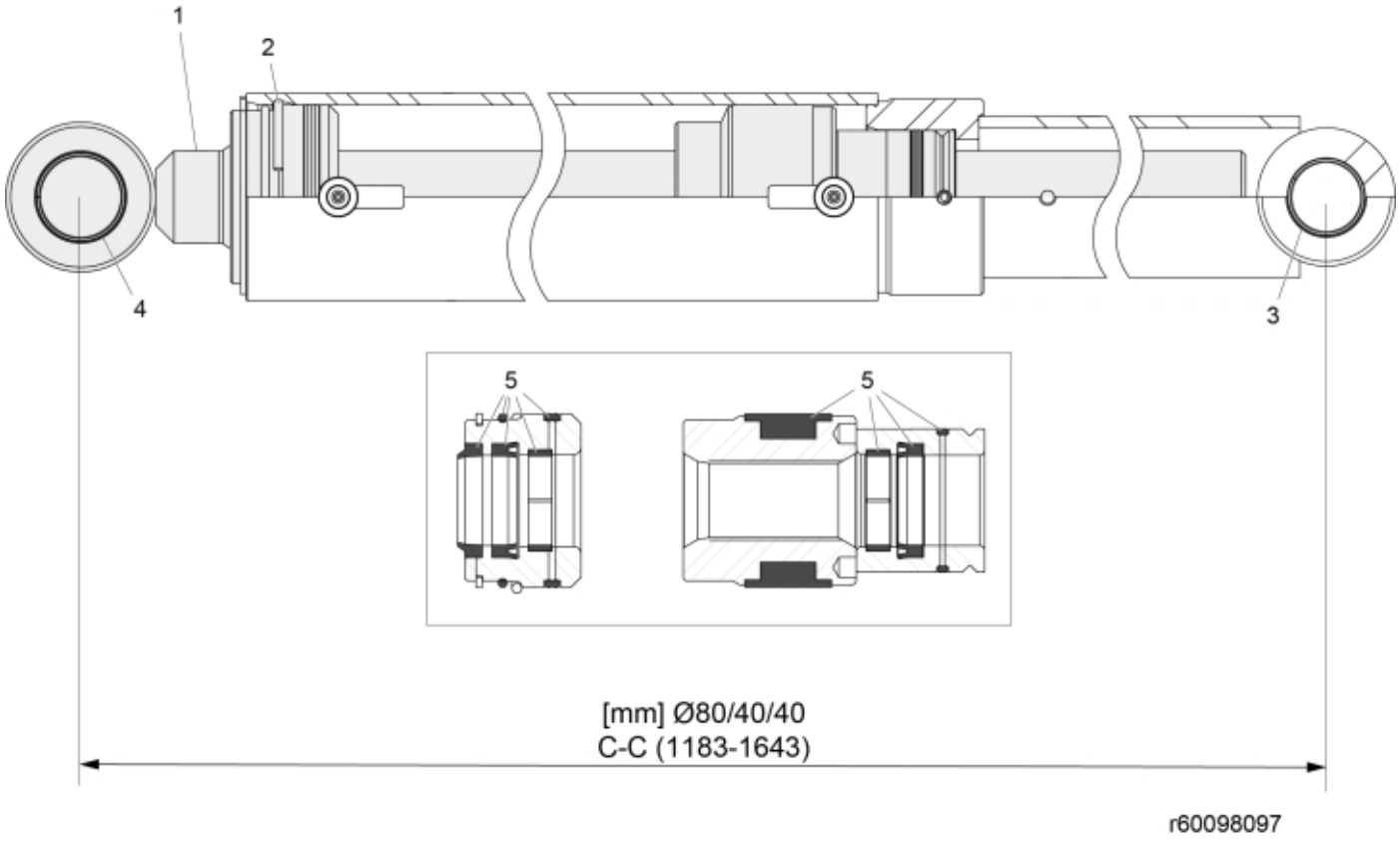

© 2025 Jost

Description	80/40/40
Part assemblies	Tilt Cylinder

PartNo	Pos	Qty	Name	Specifications
60102838	1	1	Piston rod cpl.	
5016667	2	1	Retaining ring	
5018515	3	2	Bushing	D30 L=20
5018514	4	2	Bushing	D35 L=20
60102820	5	1	Seal kit	

© 2025 Jost