Silograb L+
Multibenne L+
Multigrab S+
Multigrab L+
Multifork S+
Multifork L+
Powergrab M+
Powergrab L+
Powergrab XL+

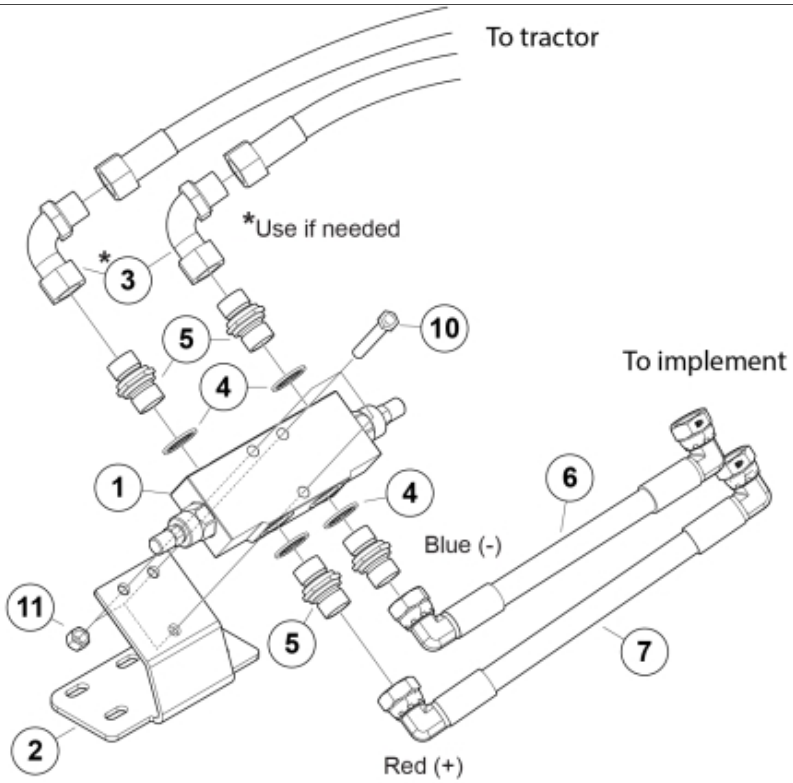

M 11256743

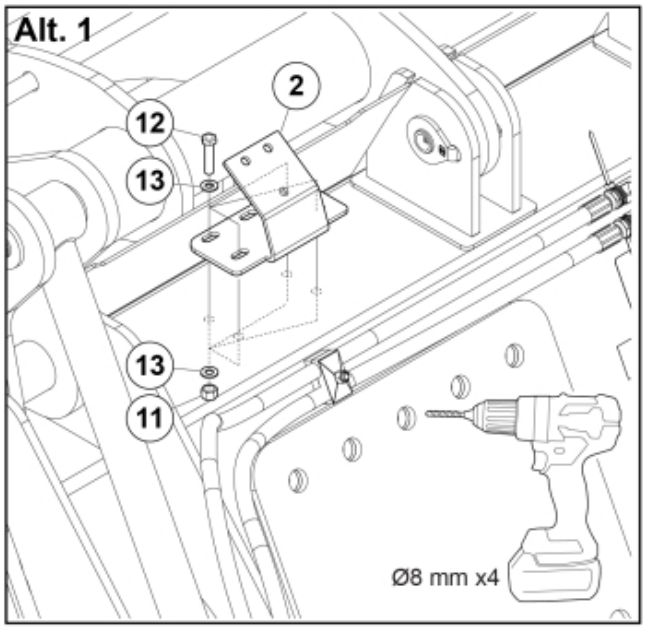

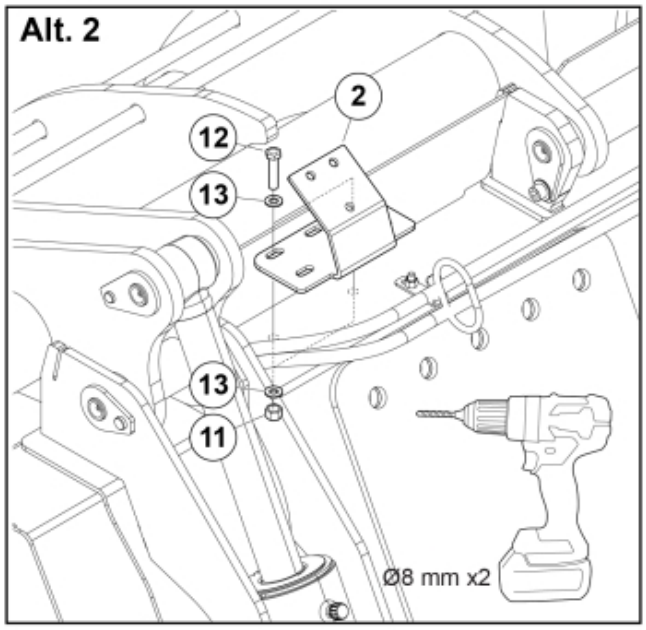

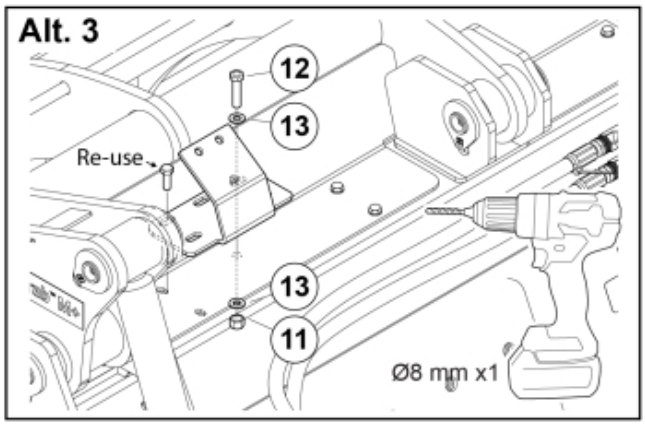

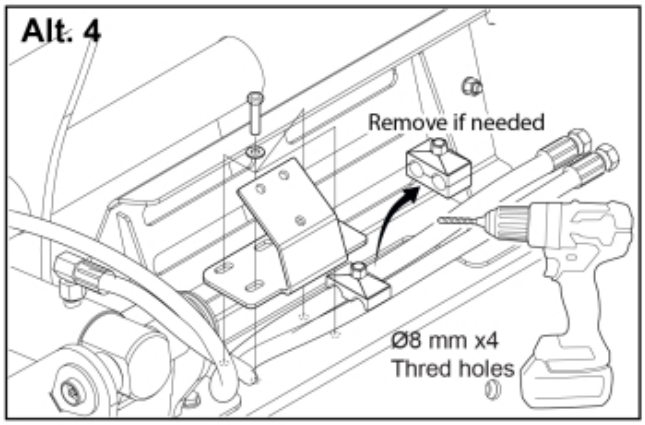

© 2025 Jost

Part assemblies Load holding valve

PartNo	Pos	Qty	Name	Specifications
60102778	1	1	Valve	
60107021-22	2	1	Bracket	
5027443	3	2 PCS	Adaptor	R 1/2"K - R 1/2"K
5013853	4	4	Dowty washer	Tredo 1/2", Part is included in kit 60007907 Hose cpl., 9032177 Hose cpl.
1120012	5	4	Adaptor	G 1/2"
60107110	6	1	Hose	3/8" L=650 1/2G90LMC 1/2G90LM
60107109	7	1	Hose	3/8" L=720 1/2G90LMC 1/2G90LM
5002056	10	3	Screw	M6S 8 x 50
5011553	11	7	Nut	M6M M8 Loc-king
5002054	12	4	Screw	M6S 8x35
5013101	13	8	Washer	BRB 8,4 x 16

© 2025 Jost