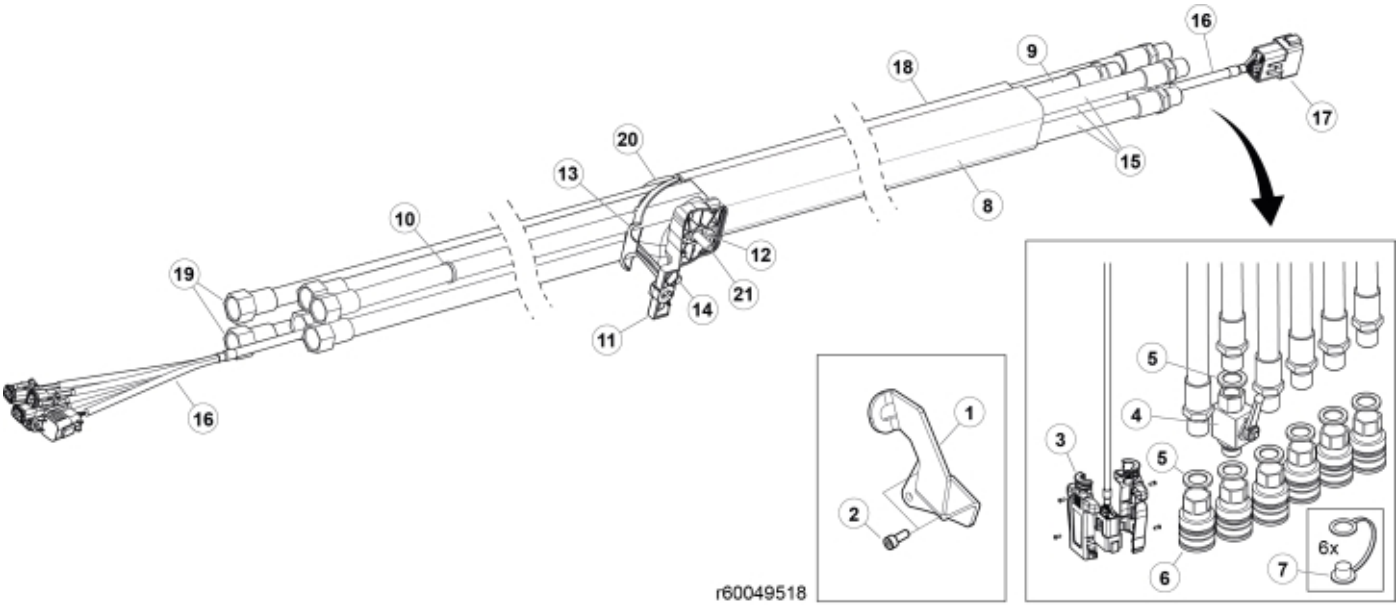

© 2025 Jost

Part assemblies Main hose kit, SA6

PartNo	Pos	Qty	Name	Specifications
60049421	1	1	Holder kit	
5004061	2	2	• Screw	MC6S M8x20
59021021	3	1	Connector handle	
5033898	4	1	Shut-off valve	1/2"
5013853	5	7	Dowty washer	Tredo 1/2", Part is included in kit 60007907 Hose cpl., 9032177 Hose cpl.
5044127	6	6	Quick Coupling	1/2", Part is included in kit 60007907 Hose cpl., 9032177 Hose cpl.
5044130	7	6	Dust Cover	Part is included in kit 60007907 Hose cpl., 9032177 Hose cpl.
5033894	8	1	Protection sleeve	800mm, D=60-70mm
60098031	9	1	Hose	1/2" L=4570 1/2GRU - 1/2GRLM
5033621	10	8	Cable tie	4.6x150
60003841	11	1	Hose clamp	Lower
5011053	12	3	• Nut	M6M M8
60002825	13	1	Hose clamp	Upper
5004055	14	1	Screw	MC6S 8x70
60091762	15	3	Hose	1/2" L=4645 1/GRU - 1/2GRLM
59050300	16	1	Electr. Cable	L=5170
5050918	17	1	• Connector	Deutsch DT 12 pin female
5034121	18	1	Protection sleeve	
60091841	19	2	Hose	3/8" L=4725 1/GRU - 3/8GRLM
60003881	20	1	Hose clamp	
60012277	21	1	Screw	MC6LS M8x80 (8.8)
5033606	22	1	Cable tie	7,5 x 385

© 2025 Jost