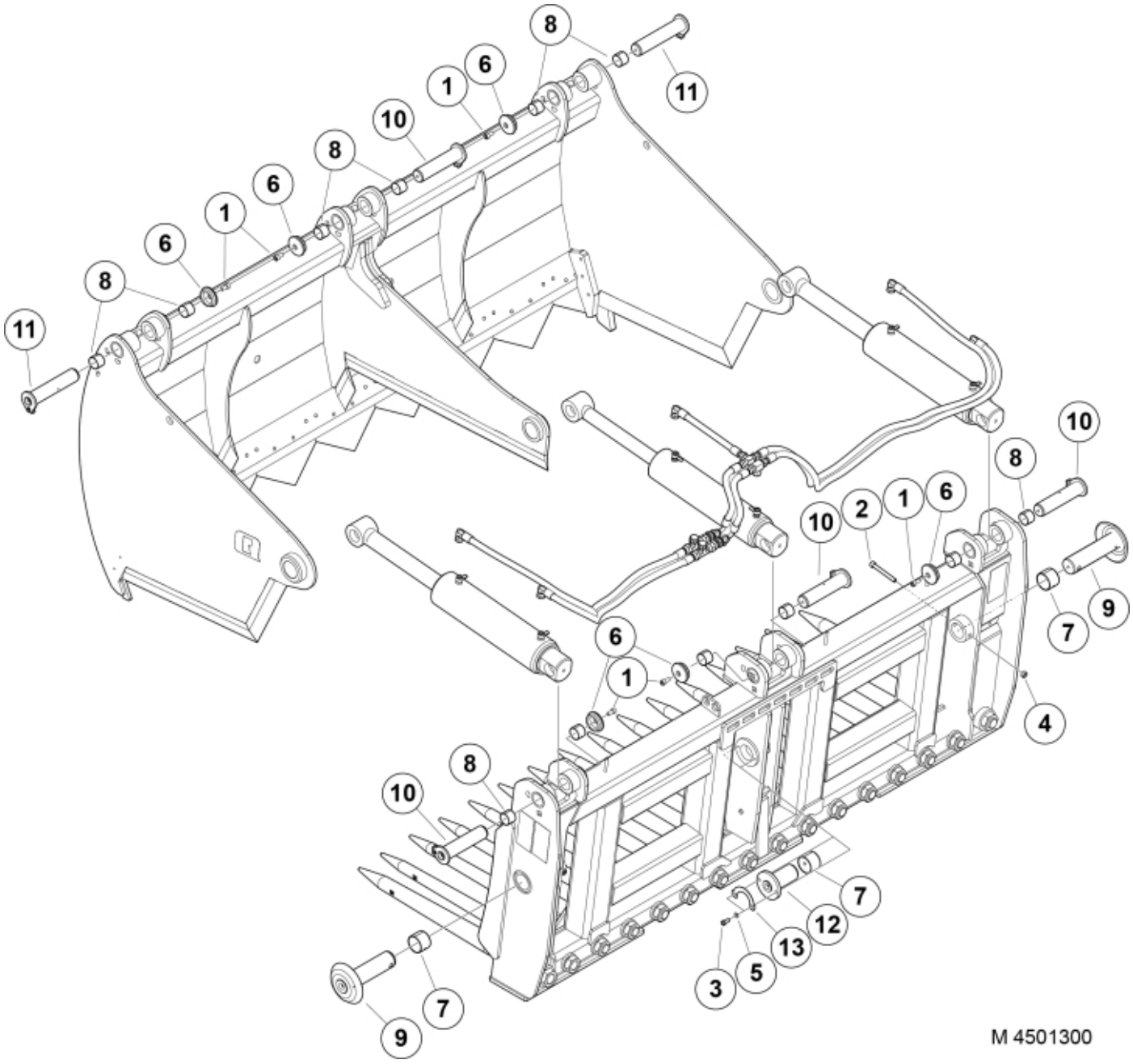

© 2025 Jost

Part assemblies Pin and bushing kit

PartNo	Pos	Qty	Name	Specifications
5050608	1	6	Screw	MC6S M10x20 Loc
5004956	2	2	Screw	MC6S M10 x 90
5002051	3	2	Screw	M6S 8 x 20
5011554	4	2	Nut	Loc-King M10
5013101	5	2	Washer	BRB 8,4 x 16
5215131	6	6	Locking cover	
5018909	7	3	Bushing	
5018513	8	12	Bushing	D40 L=20
11262660	9	2	Pin	
9020126	10	4	Pin cpl.	
9020124	11	2	Pin cpl.	
9020128	12	1	Pin cpl.	
60034182	13	1	Locking plate	

© 2025 Jost