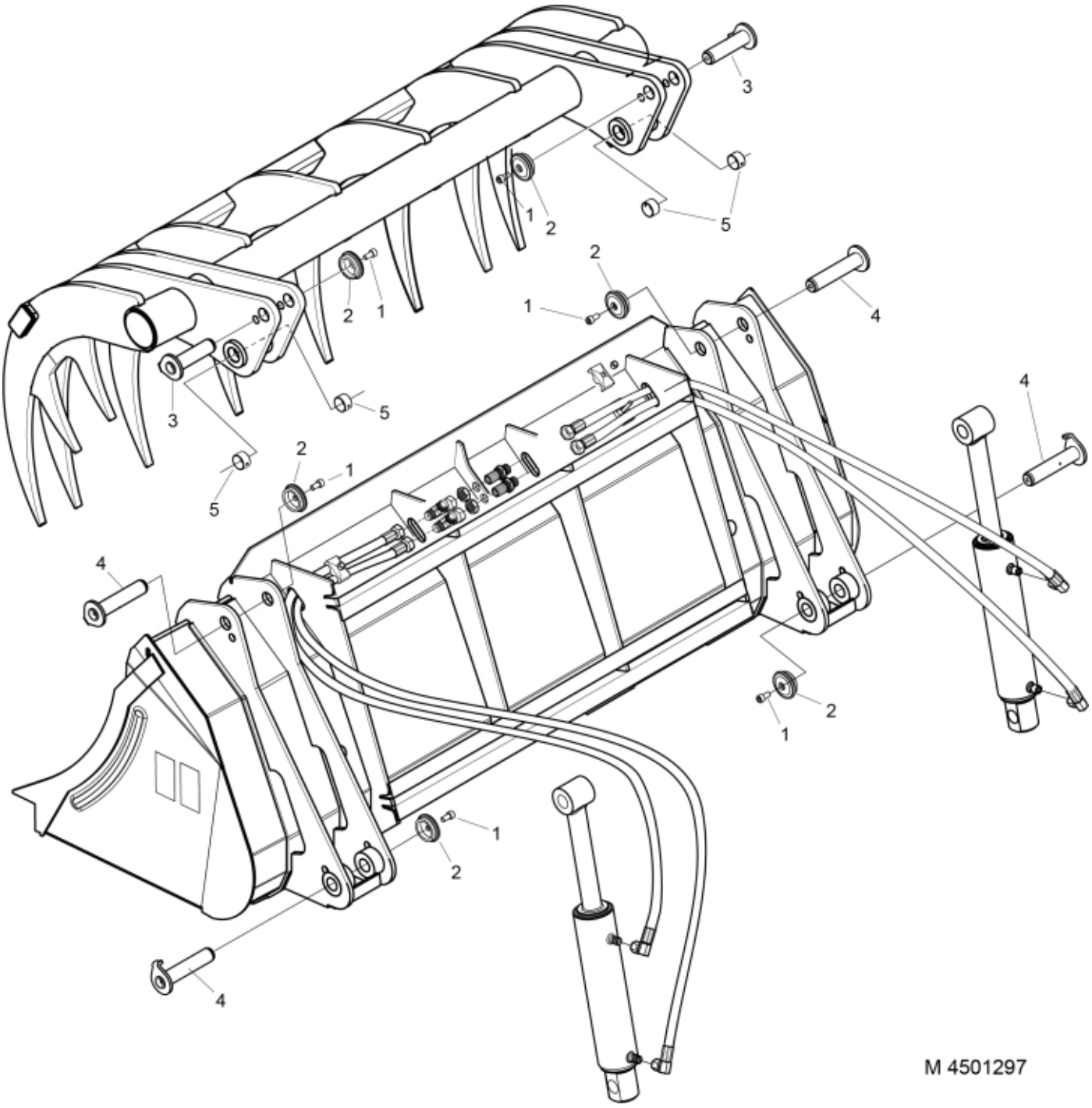

© 2025 Jost

Part assemblies Pin and bushing kit

PartNo	Pos	Qty	Name	Specifications
5050608	1	6	Screw	MC6S M10x20 Loc
5215131	2	6	Locking cover	
9020107	3	2 PCS	Pin	D=35, L=116
9020063	4	4 PCS	Pin	D=35, L=179
5018514	5	12	Bushing	D35 L=20

© 2025 Jost