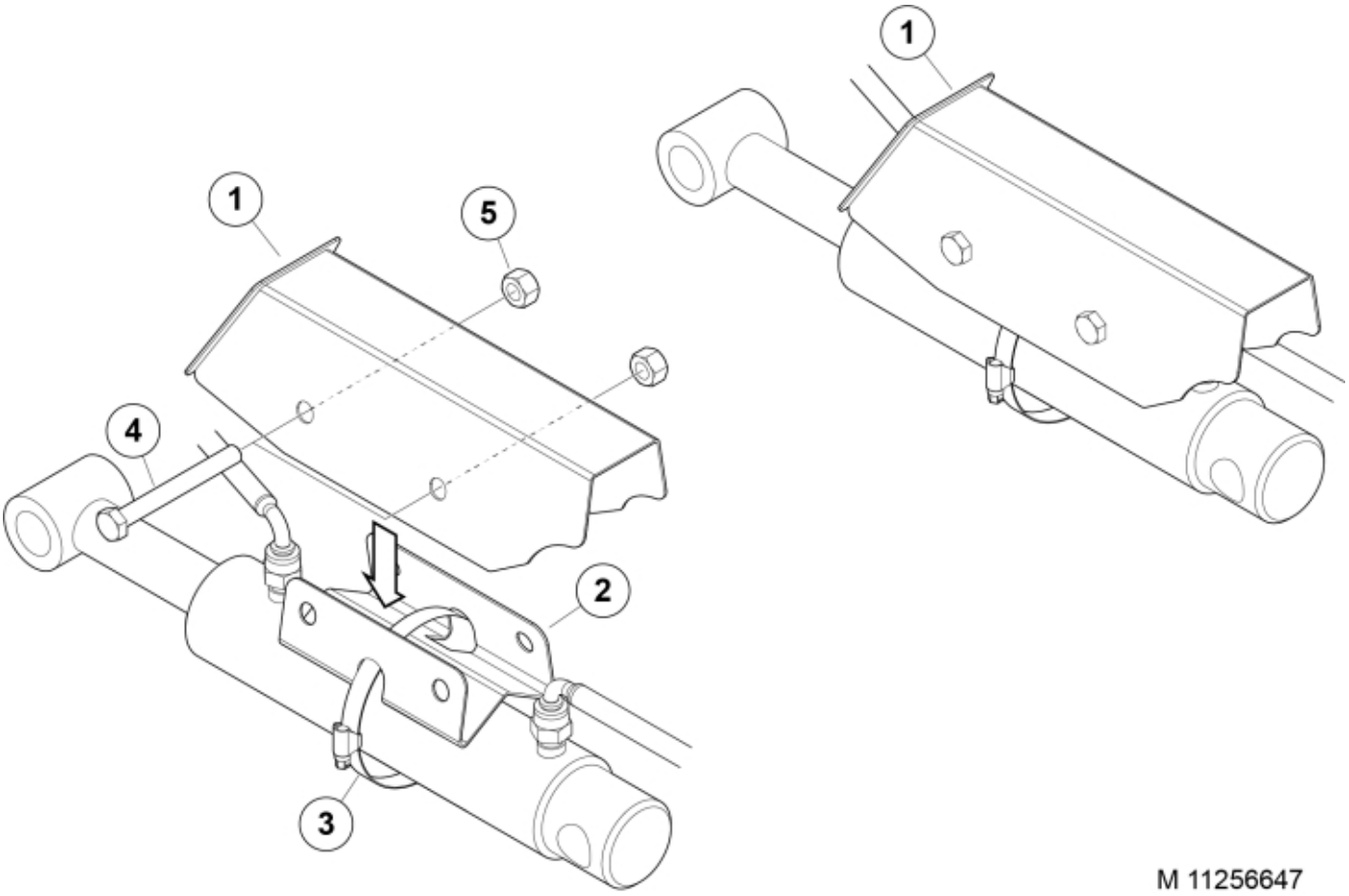

M 11256647

© 2025 Jost

Part assemblies Cylinder protection

PartNo	Pos	Qty	Name	Specifications
	1	2	Plate	
	2	2	Bracket	
	3	2	Hose clamp	
	4	4	Screw	M6S_M10x90 (8.8)
	5	4	Nut	Loc-King M10

© 2025 Jost