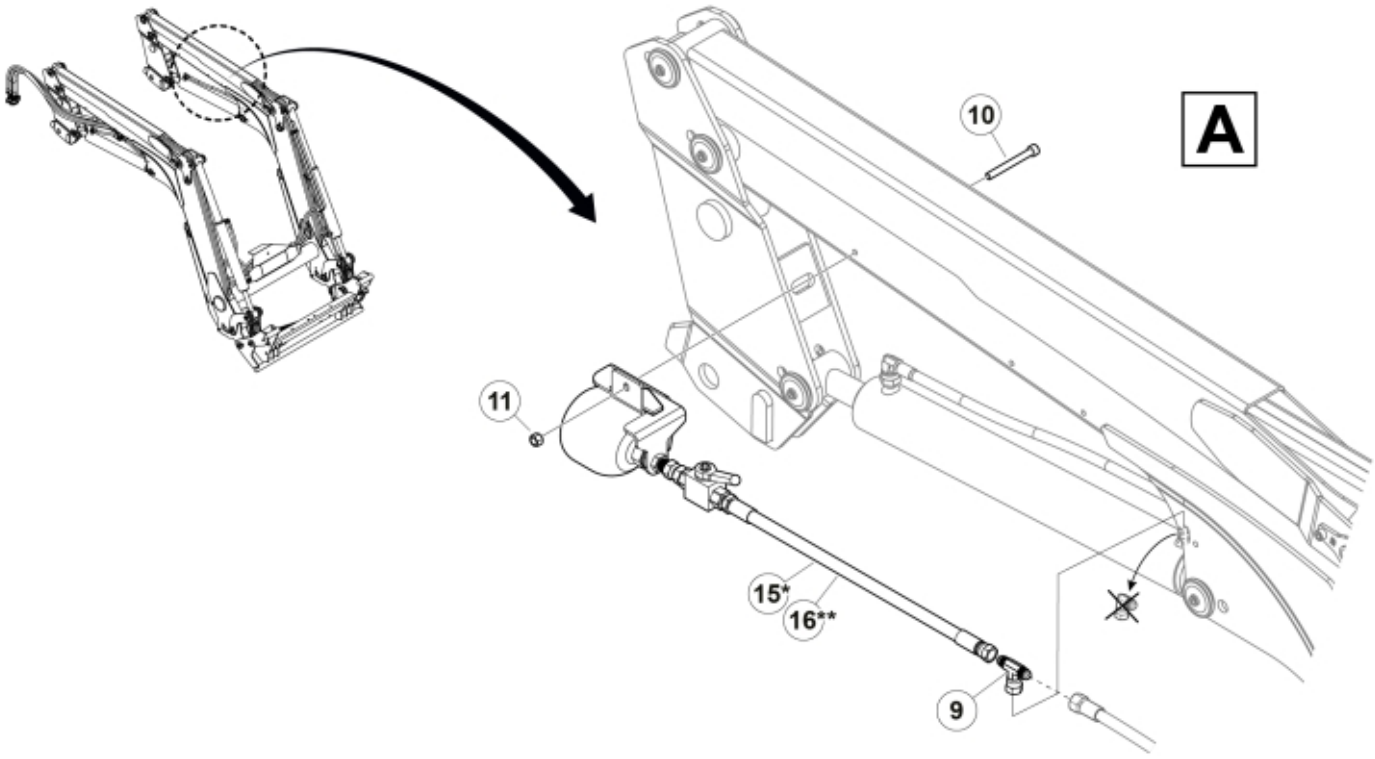

M 60110167_168

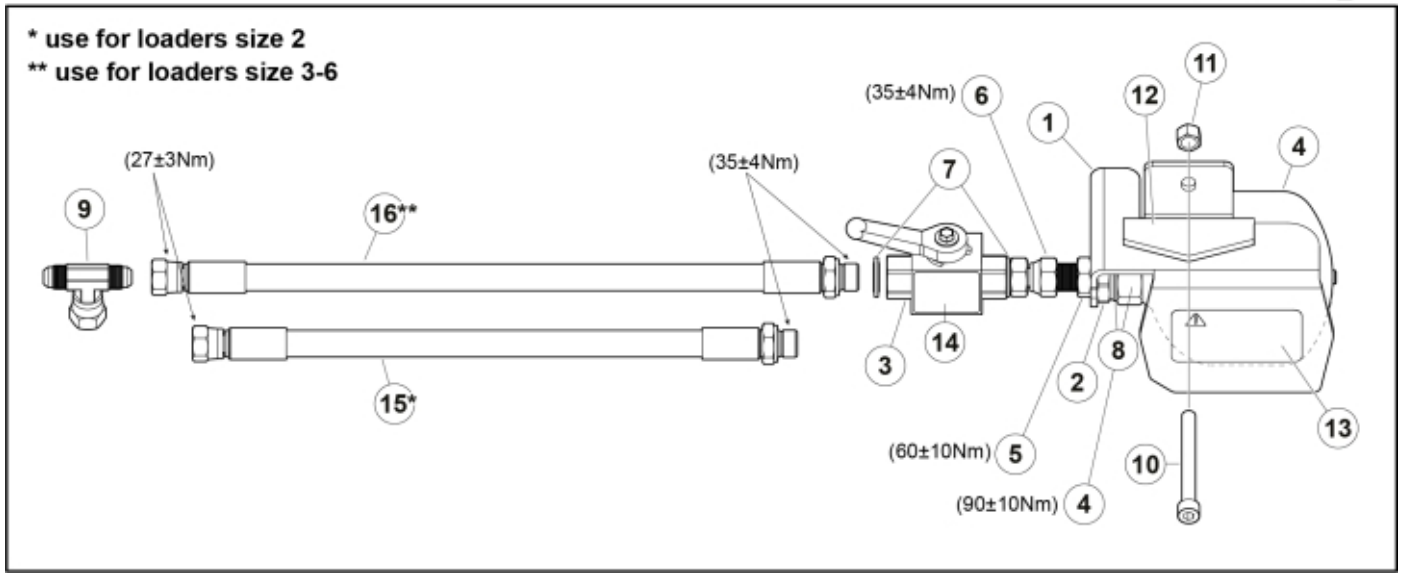

© 2025 Jost

Part assemblies SoftDrive kit

PartNo	Pos	Qty	Name	Specifications
60077196	1	1	Bracket	
60104392	2	1	Adaptor	G1/2" - G3/8"
513005	3	1	Shut-off valve	R3/8"
5033773	4	1	Accumulator	0,5L/22Bar
5011756	5	1	Nut	3/8"
1120081	6	1	Adaptor	3/8" BSP
5013852	7	2	Dowty washer	Tredo 3/8"
5013853	8	1	Dowty washer	Tredo 1/2", Part is included in kit 60007907 Hose cpl., 9032177 Hose cpl.
5028105	9	1	Adaptor	
5004054	10	1	Screw	MC6S M8x80
5011553	11	1	Nut	M6M M8 Loc-king
5221968	12	1	Rubber foam	
11136483	13	1 PCS	Decal	
11136531	14	1	Decal	
60054971	16	1	Hose	3/8" L=490 9/16RLMN - 3/8GRU

© 2025 Jost