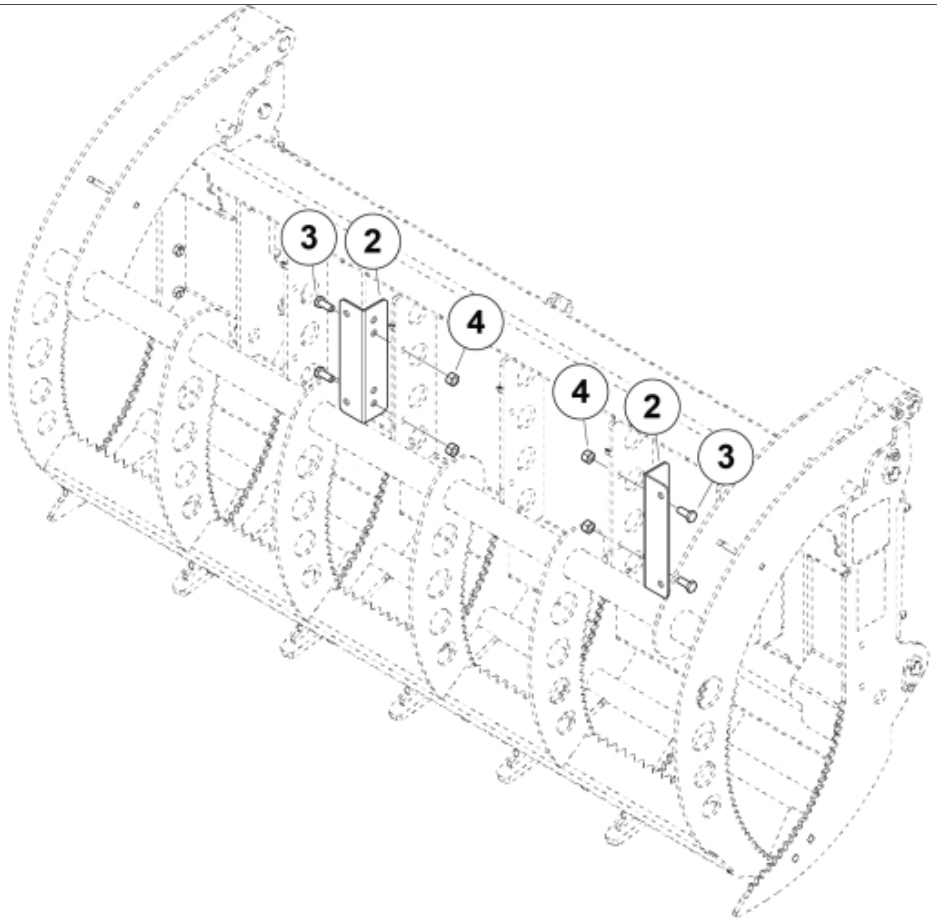

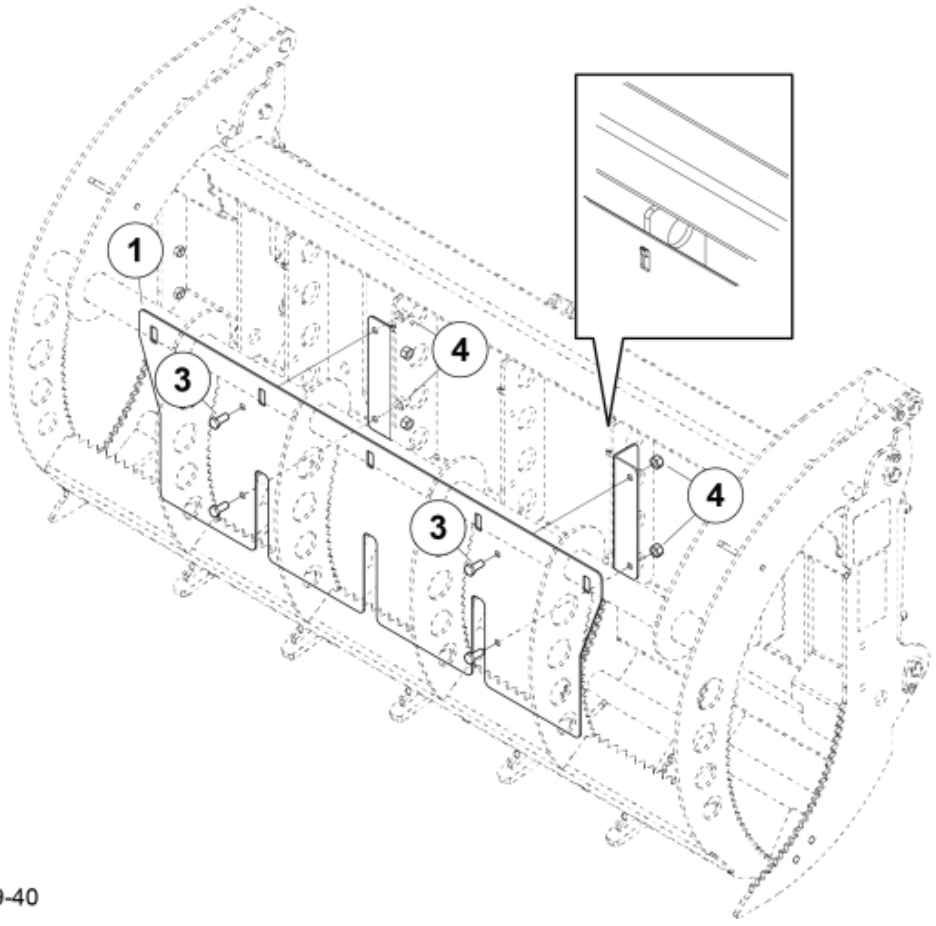

M 11256638-39-40

© 2025 Jost

Part assemblies	Cover plate

PartNo	Pos	Qty	Name	Specifications
	1	1	Plate	
	2	2	Bracket	
	3	8	Screw	M6S 10 x 25
	4	8	Nut	Loc-King M10

© 2025 Jost