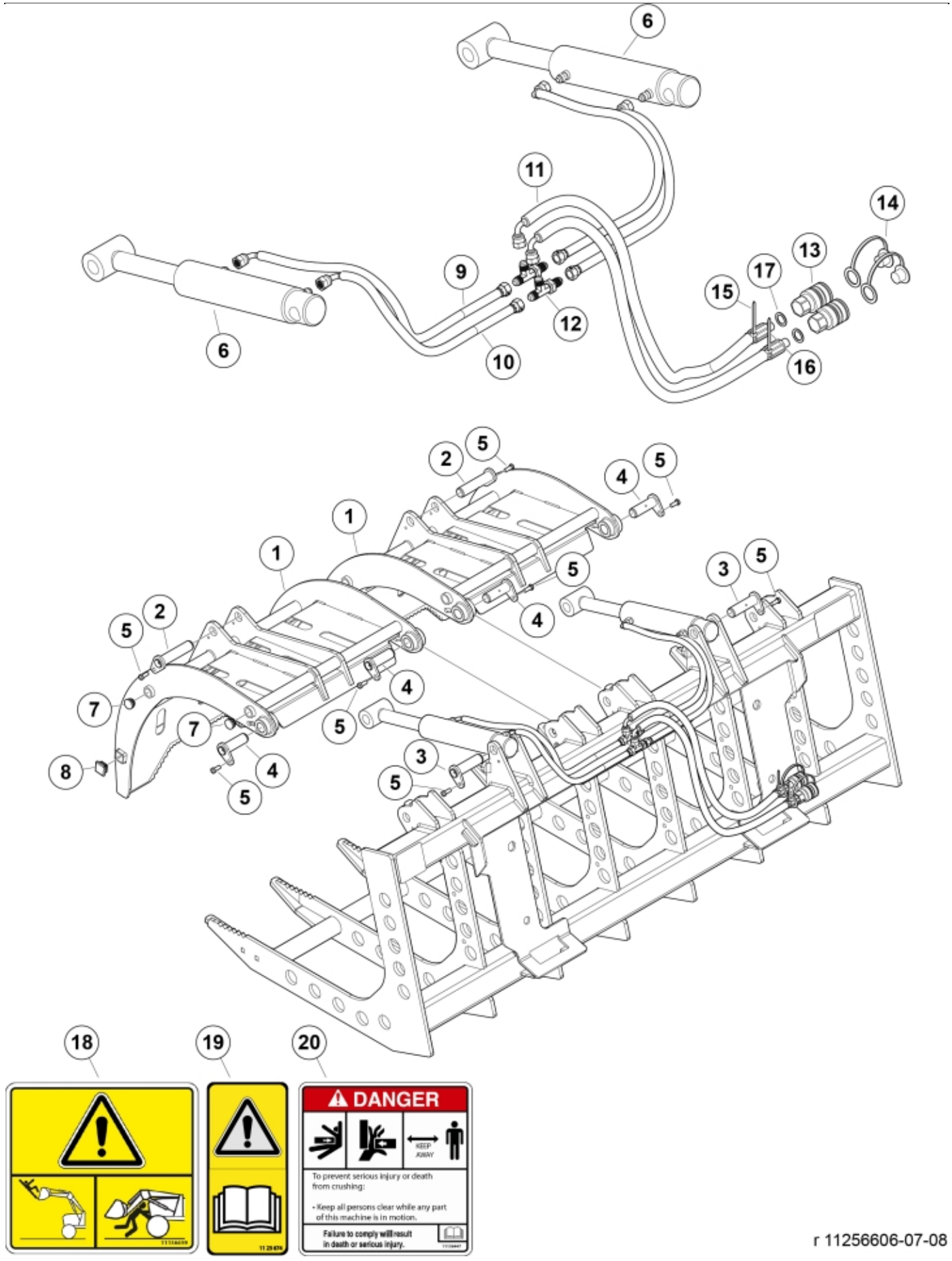

r 11256606-07-08

© 2025 Jost

Part assemblies Root Grapple CM 60" Skidsteer

PartNo	Pos	Qty	Name	Specifications
60093162-17	1	2	Jaw	
60081259	2	2	Pin	
60093417	3	2	Pin	
60059931	4	4 PCS	Pin	D=25 L=75
5002051	5	8	Screw	M6S 8 x 20
60099658-1	6	2	Cylinder	
60099714	7	8	Cover	
60099715	8	4	Cover	
60094659	9	2	Hose	1/4" L=600 9/16 RLM 9/16 90LM
60094658	10	2	Hose	1/4" L=480 9/16 RLM 9/16 90LM
60081266	11	2	Hose	3/8" L=1200 9/16 90LMC 1/2GRU
5052839	12	2	Adapter	
5044127	13	2	Quick Coupling	1/2", Part is included in kit 60007907 Hose cpl., 9032177 Hose cpl.
5044130	14	2	Dust Cover	Part is included in kit 60007907 Hose cpl., 9032177 Hose cpl.
5022177	15	1	Cable tie	Red
5022179	16	1	Cable tie	Blue
5013853	17	2	Dowty washer	Tredo 1/2", Part is included in kit 60007907 Hose cpl., 9032177 Hose cpl.
11136459	18	1	Warning decal	Only for North Am. Warning triangle
1123674	19	1	Warning decal	"Read manual"
11136447	20	1	Warning decal	Only for North Am. DANGER

© 2025 Jost