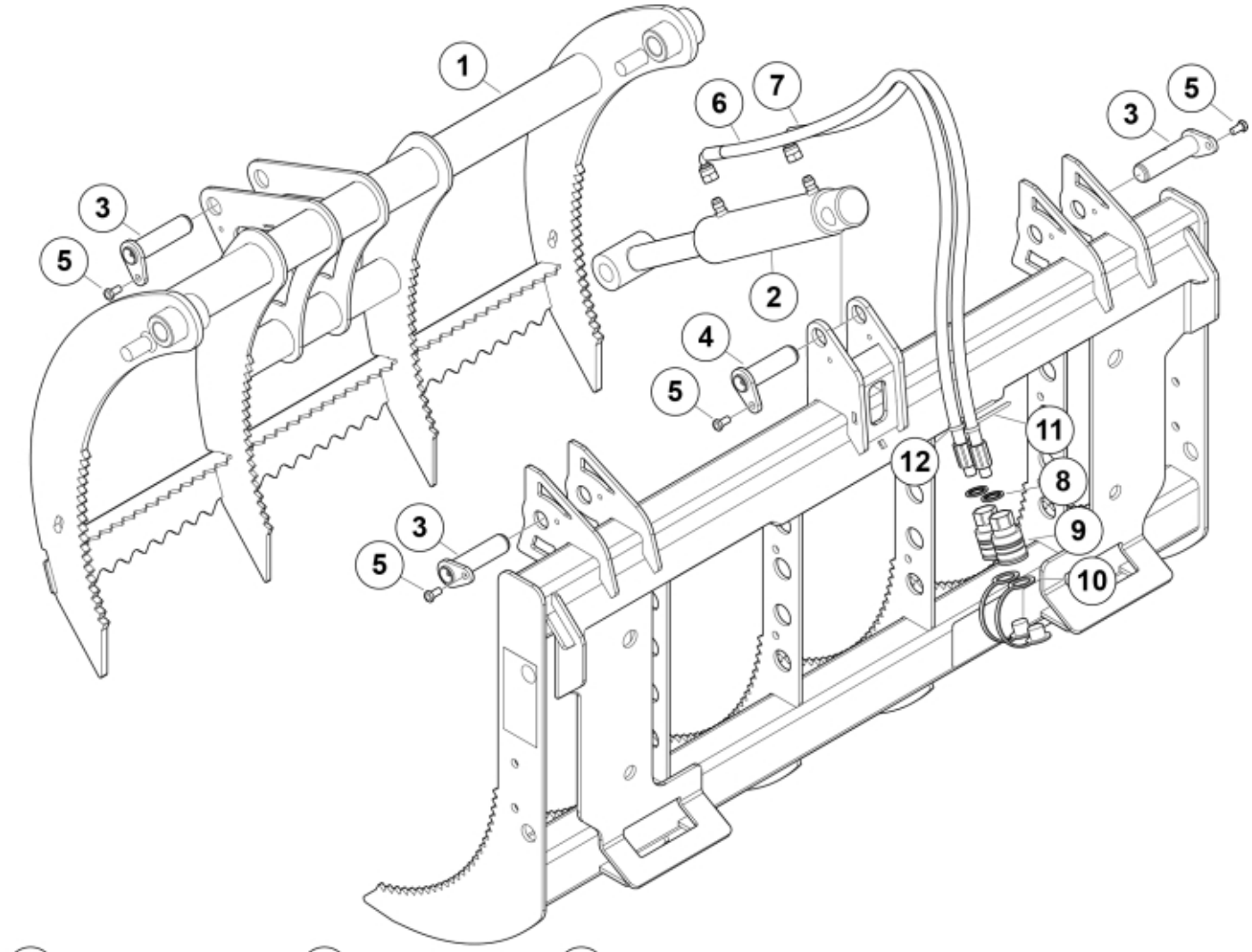



r11256609

© 2025 Jost

Part assemblies Rake Grapple CS 48" Skidsteer

PartNo	Pos	Qty	Name	Specifications
60092751-17	1	1	Jaw	
60075065-1	2	1	Cylinder	
60058259	3	3 PCS	Pin	D=25 L=95
60093417	4	1	Pin	
5002058	5	4	Screw	M6S 8x16
60081267	6	1	Hose	3/8" L=1400 9/16 90LMC 1/2GRU
60081266	7	1	Hose	3/8" L=1200 9/16 90LMC 1/2GRU
5013853	8	2	Dowty washer	Tredo 1/2", Part is included in kit 60007907 Hose cpl., 9032177 Hose cpl.
5044127	9	2	Quick Coupling	1/2", Part is included in kit 60007907 Hose cpl., 9032177 Hose cpl.
5044130	10	2	Dust Cover	Part is included in kit 60007907 Hose cpl., 9032177 Hose cpl.
5022177	11	1	Cable tie	Red
5022179	12	1	Cable tie	Blue
11136459	13	1	Warning decal	Only for North Am. Warning triangle
1123674	14	1	Warning decal	"Read manual"
11136447	15	1	Warning decal	Only for North Am. DANGER

© 2025 Jost