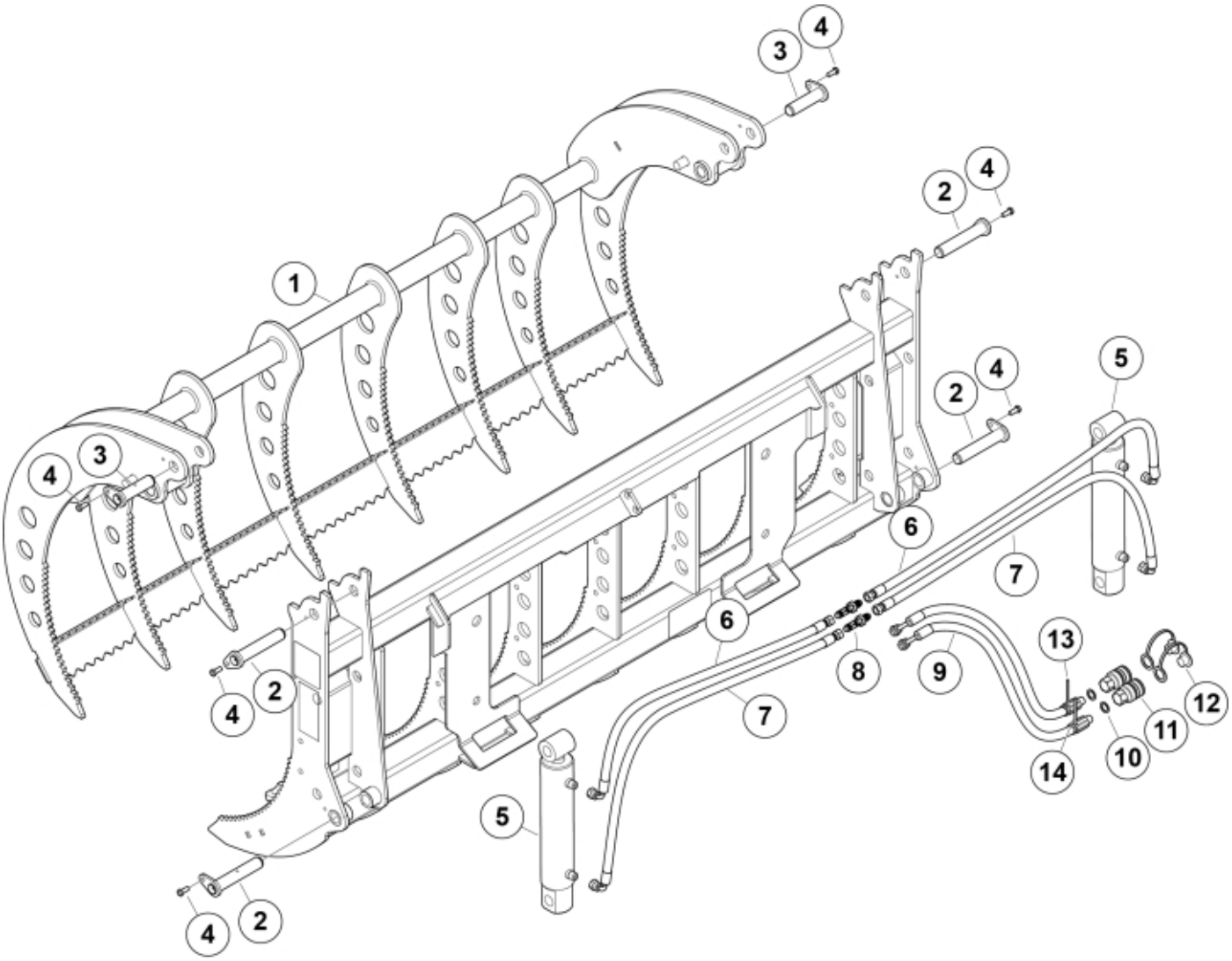



15



16



17

r11256612

© 2025 Jost

Part assemblies Rake Grapple CL 72 Skidsteer

PartNo	Pos	Qty	Name	Specifications
60093465-17	1	1	Jaw	
60102663	2	4	Pin	
60058259	3	2 PCS	Pin	D=25 L=95
5002051	4	6	Screw	M6S 8 x 20
60110582-1	5	2	Cylinder	Glossy Black, 12/10/2025 12:00:00 AM
60106232	6	2	Hose	3/8" L=900 9/16RLM 3/8 G90LM
60097793	7	2	Hose	3/8" L=1100 9/16RLM 3/8 G90LM
5052839	8	2	Adapter	
60081266	9	2	Hose	3/8" L=1200 9/16 90LMC 1/2GRU
5013853	10	2	Dowty washer	Tredo 1/2", Part is included in kit 60007907 Hose cpl., 9032177 Hose cpl.
5044127	11	2	Quick Coupling	1/2", Part is included in kit 60007907 Hose cpl., 9032177 Hose cpl.
5044130	12	2	Dust Cover	Part is included in kit 60007907 Hose cpl., 9032177 Hose cpl.
5022177	13	1	Cable tie	Red
5022179	14	1	Cable tie	Blue
1123674	15	1	Warning decal	"Read manual"
11136459	16	1	Warning decal	Only for North Am. Warning triangle
11136447	15	1	Warning decal	Only for North Am. DANGER

© 2025 Jost