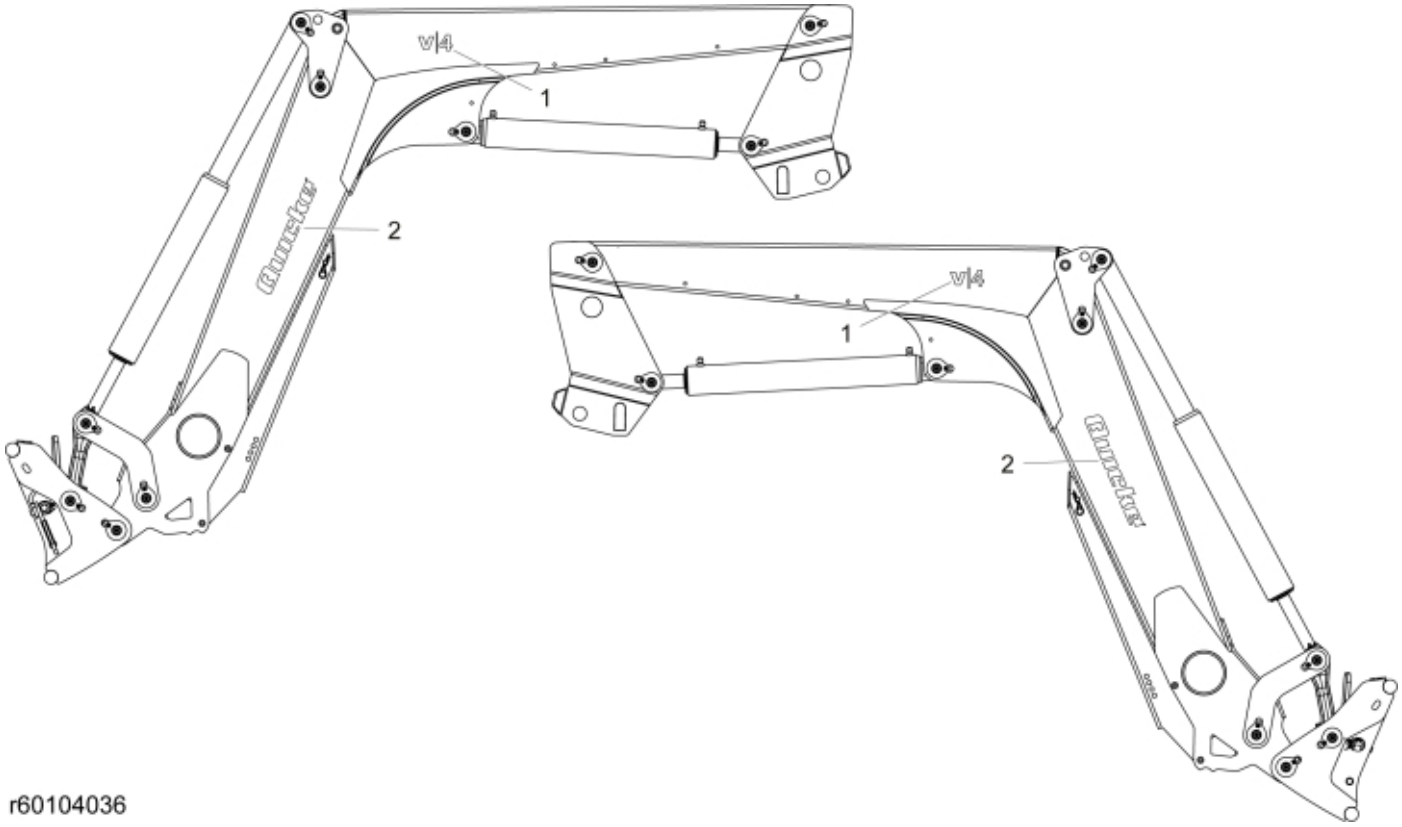

r60104036

© 2025 Jost

Description	V4
Part assemblies	Decals

PartNo	Pos	Qty	Name	Specifications
60104069	1	2	Decal, Model	V4
60028480	2	2 PCS	Decal, Brand	

© 2025 Jost