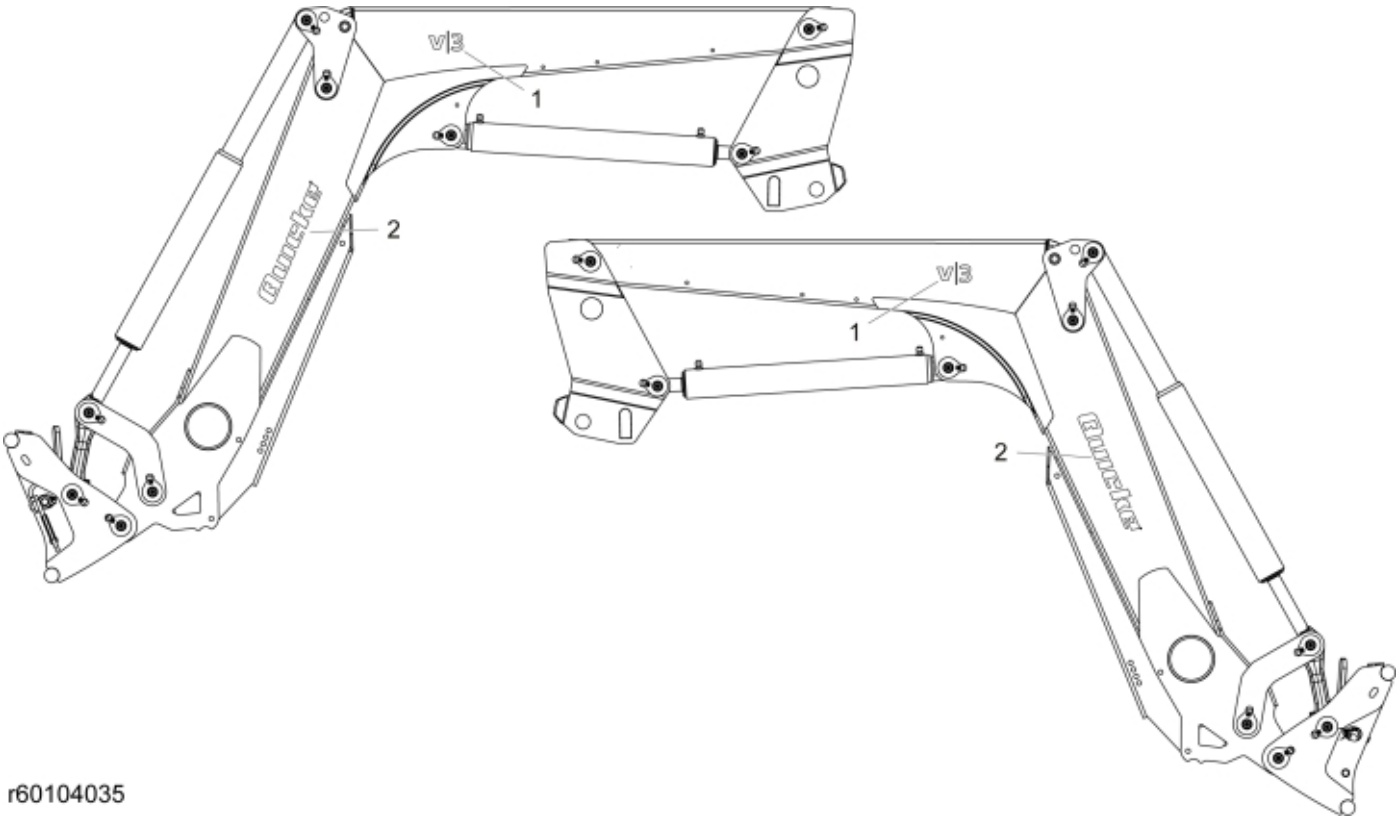

r60104035

© 2025 Jost

Description	V3
Part assemblies	Decals

PartNo	Pos	Qty	Name	Specifications
60104067	1	2	Decal, Model	V3
60028480	2	2 PCS	Decal, Brand	

© 2025 Jost