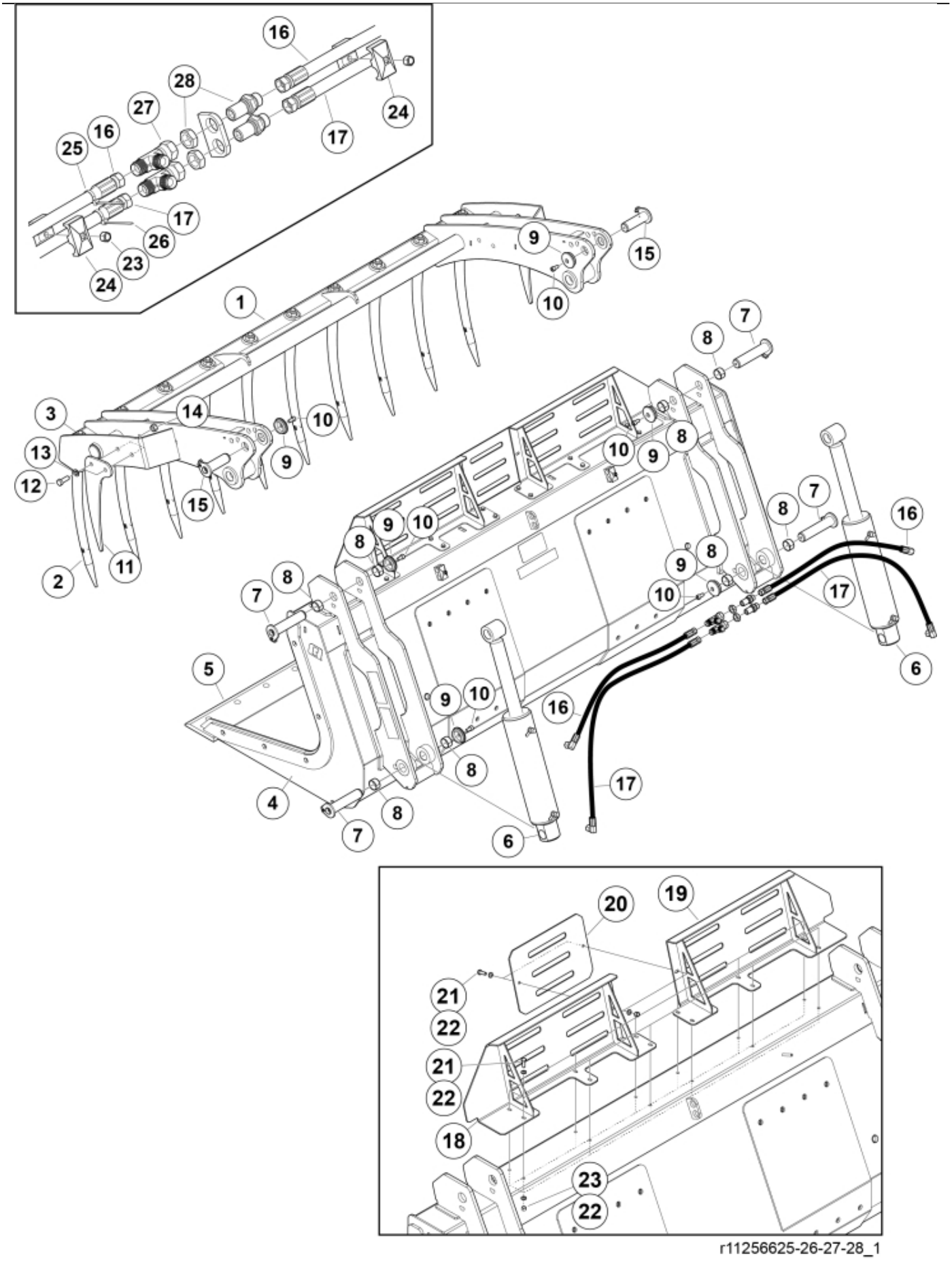

r11256625-26-27-28_1

© 2025 Jost



r11256625-26-27-28_2

© 2025 Jost

Part assemblies Multibenne L+ 220

PartNo	Pos	Qty	Name	Specifications
60098707-17	1	1	Upper part, without tines	
5068112-17	2	10 PCS	• Tine with nut	L=680, Curved
5068111	3	10	•• Nut	Conus 1
60084830-17	4	1	Bucket	
60044937	5	1 PCS	• Cutting edge	
60126216-1	6	2	Cylinder	4/8/2026 12:00:00 AM
60080116	7	4	Pin	
5018514	8	4	Bushing	D35 L=20
5215131	9	6	Locking cover	
5050608	10	6	Screw	MC6S M10x20 Loc
11260312-22	11	2	Side tine	
5002128	12	4	Screw	M6S M14 x 40 (8.8)
5013107	13	8	Washer	BRB 15 x 26 x 2
5011556	14	4	Nut	M14
60077525	15	2	Pin	
60057104	16	2	Hose	3/8" L=1050 1/2GRLM 3/8G90LMC
60057105	17	2	Hose	3/8" L=1250 1/2GRLM 3/8G90LMC
60085957-17	18	1	Spillguard	
60085958-17	19	1	Spillguard	
60085961-22	20	1	Plate	
5002052	21	14	Screw	M6S M8x25
5013101	22	28	Washer	BRB 8,4 x 16
5011553	23	16	Nut	M6M M8 Loc-king
5016968	24	2	Hose clamp	
5022179	25	1	Cable tie	Blue
5022177	26	1	Cable tie	Red
5028031	27	2	T-Adapter	
11120580	28	2	Adapter cpl.	
60098229	29	1	Decal	Multibenne L+
1123674	30	1	Warning decal	"Read manual"
1123673	31	1	Warning decal	
60056626	32	2	Decal	
60034425	33	1	Warning decal	

© 2025 Jost