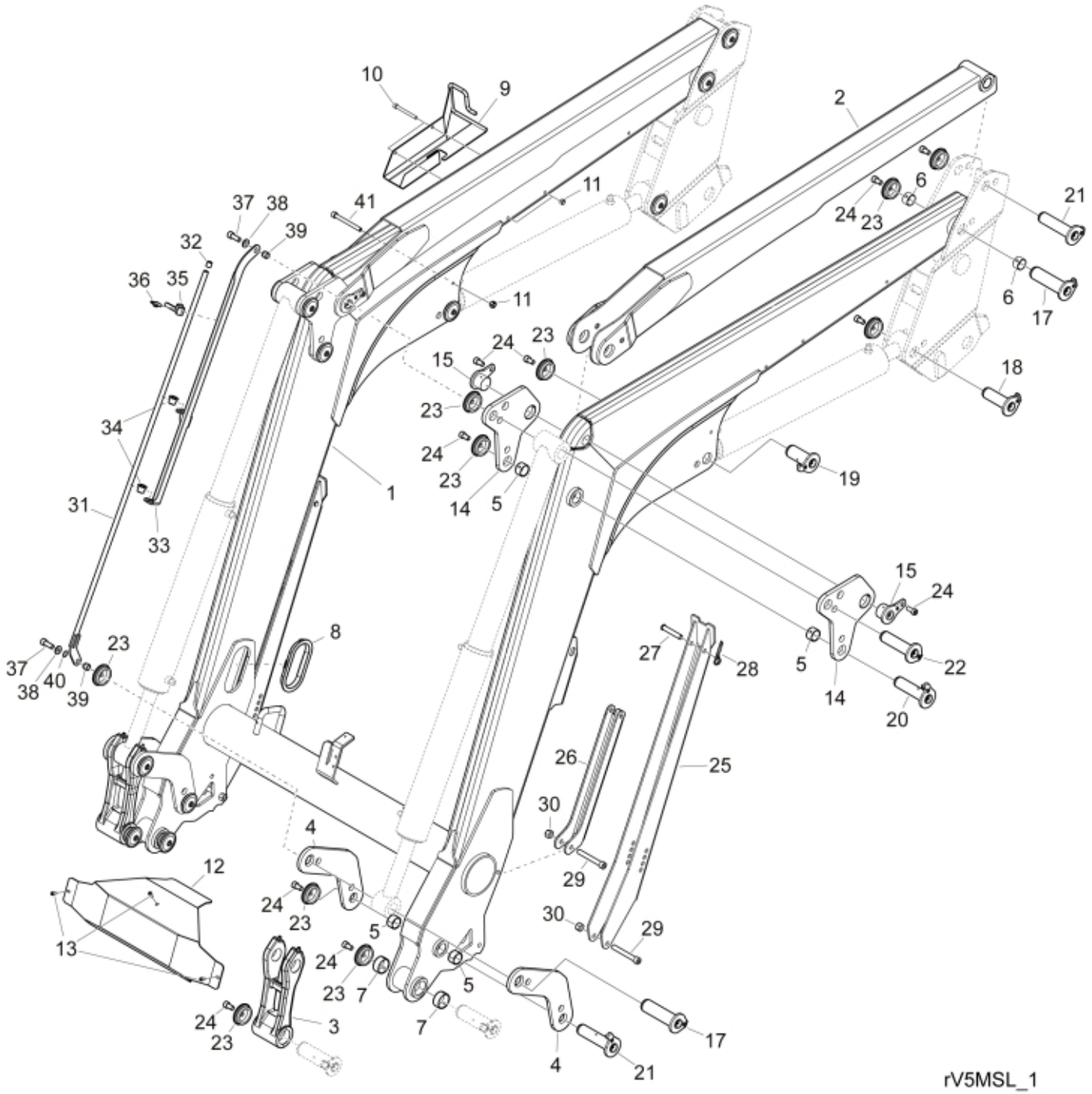
10
9
2
11
41
37
38
39
32
36
35
11
6
24
23
21
6
17
24
23
15
18
23
34
24
23
19
1
14
5
31
33
15
24
8
23
27
28
5
22
37
40
38
39
14
20
26
25
30
4
12
29
24
23
30
29
13
5
24
23
7
5
24
23
3
7
17
4
21
rV5MSL_1

© 2025 Jost

Part assemblies Loader beam

PartNo	Pos	Qty	Name	Specifications
60056627-17	1	1	Loader beam	Black Texture
60078934-17	2	2	Parallel rod w. bushings	Black Texture
60018637	3	2	Link w. bushings	Glossy Black
60055298-17	4	4	Link	Black Texture
5018515	5	8	Bushing	D30 L=20
5018514	6	4	Bushing	D35 L=20
5018513	7	4	Bushing	D40 L=20
60061347	8	2	Edge cover	
60054871-17	9	1	Bracket	Black Texture
5004054	10	2	Screw	MC6S M8x80
5011553	11	3	Nut	M6M M8 Loc-king
60075838-17	12	1	Cover plate	Black Texture
5004033	13	3	Screw	MC6S M6 x 12
60079471-17	14	4	Knee link w. bushing	
60055328	15	4	Pivot Pin	D44/40 L=30
60018053	17	4	Pivot Pin	D=35, L=127mm
60018058	18	2	Pivot Pin	D=35, L=96mm
60018059	19	2	Pivot Pin	D=35, L84mm
9020057	20	2 PCS	Pivot Pin	D=30, L=118mm
60018046	21	4	Pivot Pin	D=30, L=127mm
9020058	22	2 PCS	Pivot Pin	Ø 35 x 118
5215131	23	20	Locking cover	
5050608	24	22	Screw	MC6S M10x20 Loc
60087500-17	25	2	Support leg	Black Texture
60044545-17	26	2	Stay	Black Texture
5051984	27	2	Locking Pin	
5221186	28	2	Pin clip	□ 12x120
5052133	29	4	Screw	MC6S M12x19
5011555	30	4	Nut	M12 Loc
60078579	31	1	Indicator rod	
60078607	32	1	Cap	
60075601	33	1	Indicator plate	
60087024	34	2	Bushing	
60088856	35	1	Clamp	
5052274	36	1	Wing screw	M6X12
5052207	37	2	Screw	MC6S M10x30 Loc
5013110	38	2	Washer	BRB 10.5x22x2
60074911	39	2	Sleeve	16X10X13
5052465	40	1	O-ring	
5004939	41	1 PCS	Screw	MC6S 8x90

© 2025 Jost