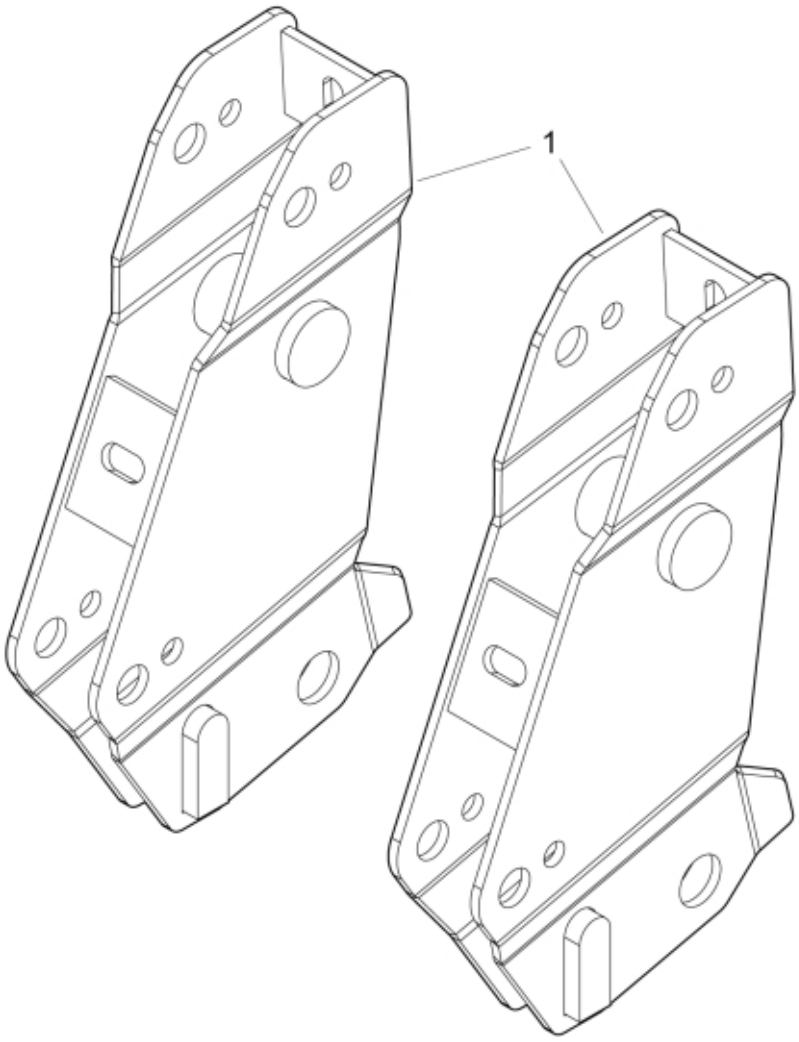

r60073947

© 2025 Jost

Description	NSL
Part assemblies	Bearing box

PartNo	Pos	Qty	Name	Specifications
60073947-17	1	2	Bearing box	Black Texture

© 2025 Jost