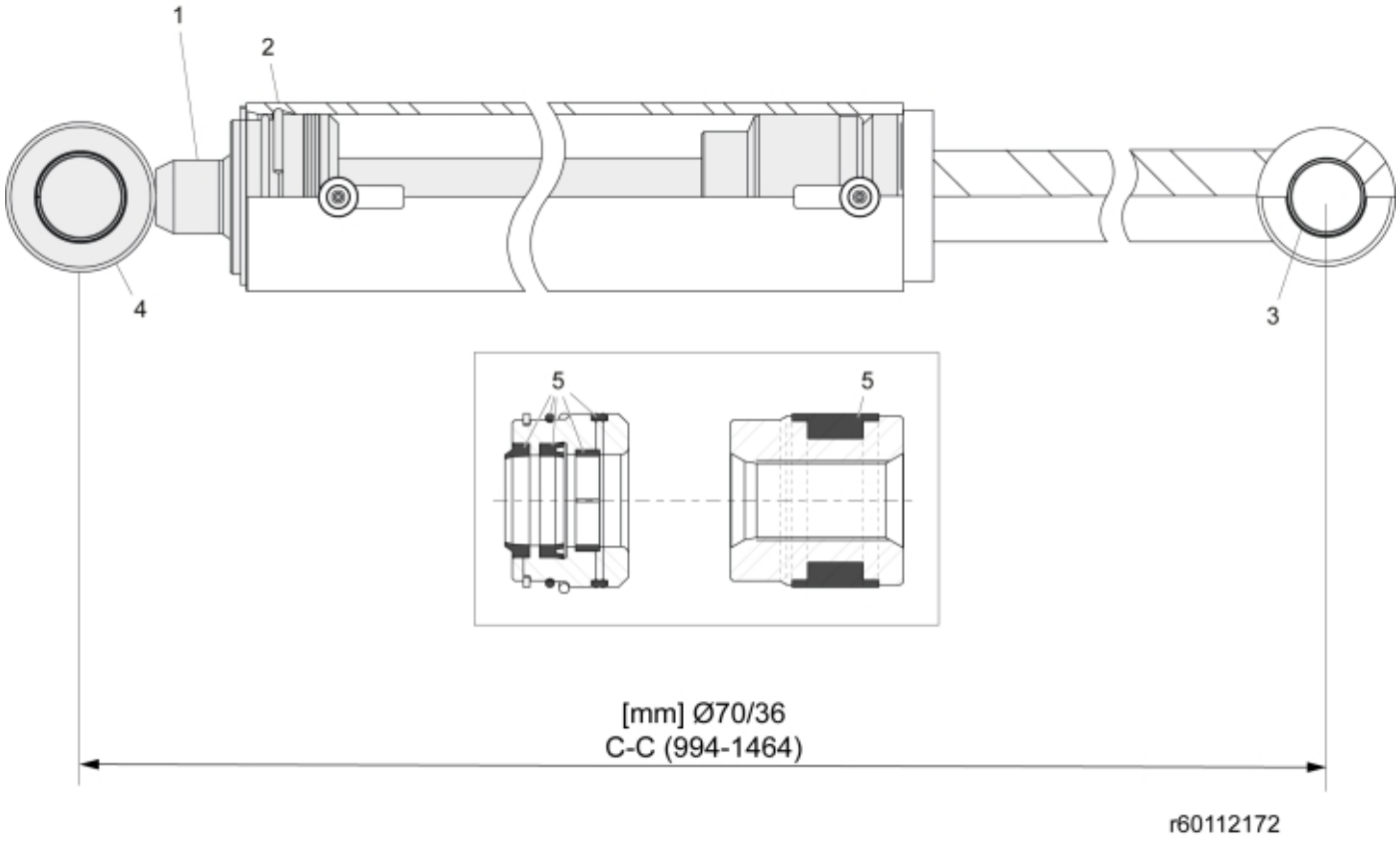

© 2025 Jost

Description	70/36
Part assemblies	Tilt Cylinder

PartNo	Pos	Qty	Name	Specifications
60112891	1	1	Piston rod cpl.	
5016669	2	1	Retaining ring	
5018515	3	2	Bushing	D30 L=20
5018514	4	2	Bushing	D35 L=20
4501320	5	1	Seal kit	

© 2025 Jost