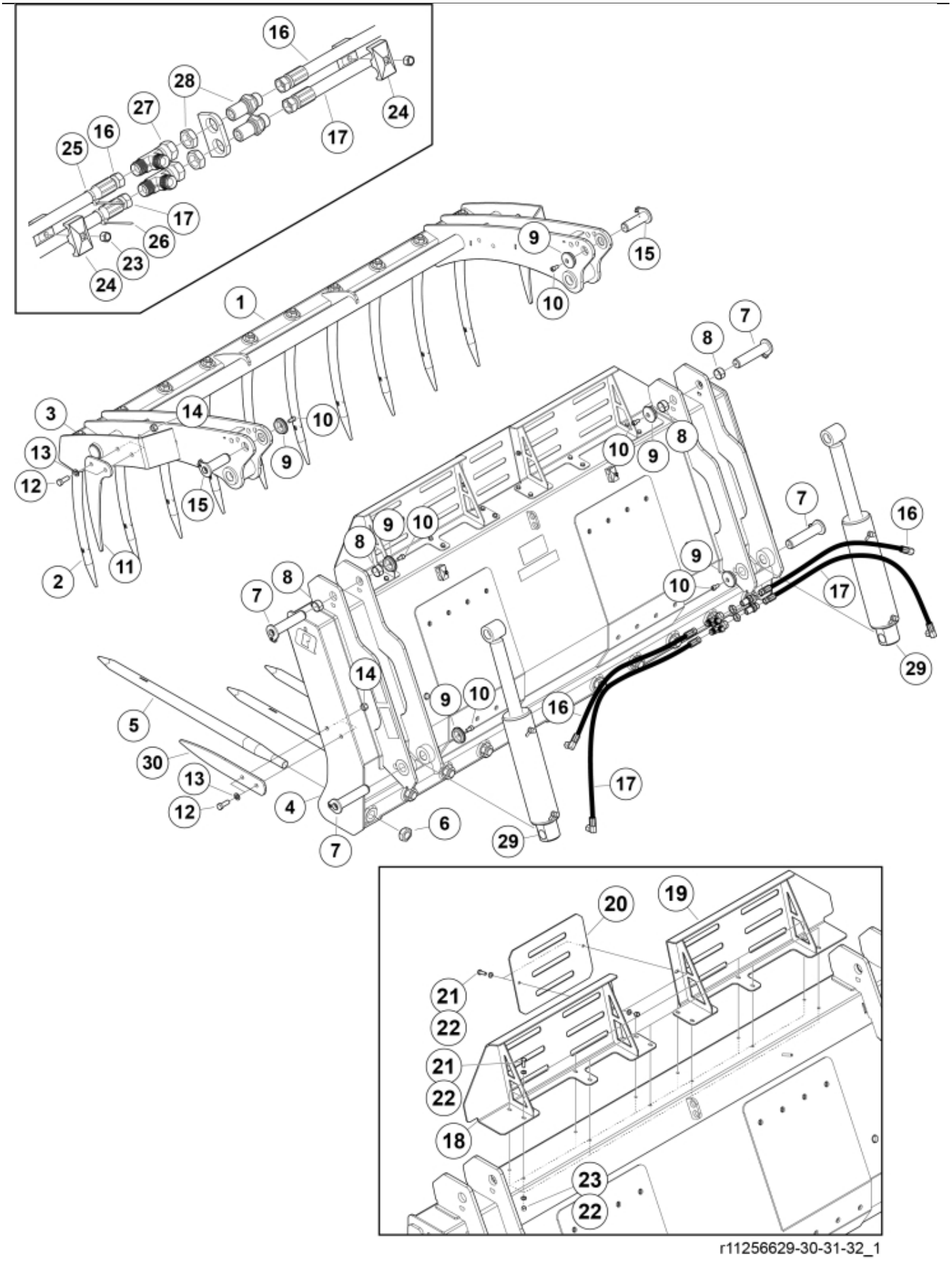

r11256629-30-31-32_1

© 2025 Jost



r11256629-30-31-32_2

© 2025 Jost

Part assemblies Silograb L+ 220

PartNo	Pos	Qty	Name	Specifications
60098707-17	1	1	Upper part, without tines	
5068112-17	2	10 PCS	• Tine with nut	L=680, Curved
5068111	3	10	•• Nut	Conus 1
60098737-17	4	1	Frame, without tines	
5068010-17	5	11	• Tine with nut	980
5068116	6	11	•• Nut	Conus 2
60080116	7	4	Pin	
5018514	8	4	Bushing	D35 L=20
5215131	9	6	Locking cover	
5050608	10	6	Screw	MC6S M10x20 Loc
11260312-22	11	2	Side tine	
5002128	12	8	Screw	M6S M14 x 40 (8.8)
5013107	13	16	Washer	BRB 15 x 26 x 2
5011556	14	8	Nut	M14
60077525	15	2	Pin	
60057104	16	2	Hose	3/8" L=1050 1/2GRLM 3/8G90LMC
60057105	17	2	Hose	3/8" L=1250 1/2GRLM 3/8G90LMC
60085957-17	18	1	Spillguard	
60085958-17	19	1	Spillguard	
60085961-22	20	1	Plate	
5002052	21	14	Screw	M6S M8x25
5013101	22	28	Washer	BRB 8,4 x 16
5011553	23	16	Nut	M6M M8 Loc-king
5016968	24	2	Hose clamp	
5022179	25	1	Cable tie	Blue
5022177	26	1	Cable tie	Red
5028031	27	2	T-Adapter	
11120580	28	2	Adapter cpl.	
60126216-1	29	2	Cylinder	4/8/2026 12:00:00 AM
11260256-22	30	1	Side tine	
60056616	31	2	Decal	"Q" medium 110mm
60034425	32	1	Warning decal	
1123674	33	1	Warning decal	"Read manual"
1123673	34	1	Warning decal	
60098344	35	1	Decal	Silograb L+

© 2025 Jost