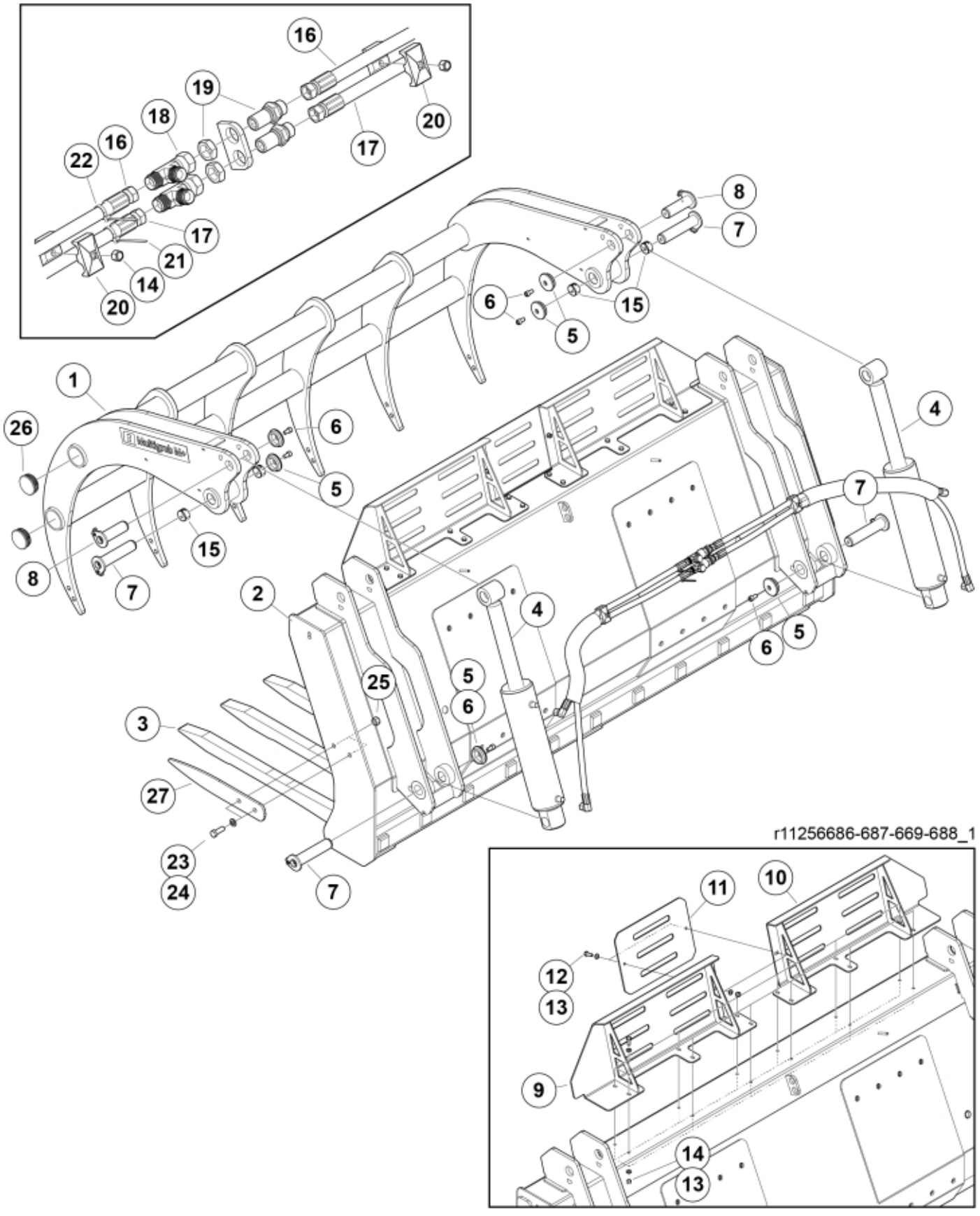
16
19
18
22
16
17
20
17
21
14
20
8
7
6
15
5
1
26
6
5
4
7
15
8
7
2
4
6
5
25
5
6
3
27
23
24
7
r11256686-687-669-688_1
11
10
12
13
9
14
13

© 2025 Jost



r11256686-687-669-688_2

© 2025 Jost

Part assemblies Multifork L+ 220

PartNo	Pos	Qty	Name	Specifications
60084812-17	1	1	Jaw	
60101438-17	2	1	Frame	
60101646	3	11	Tine	
60126216-1	4	2	Cylinder	4/8/2026 12:00:00 AM
5215131	5	6	Locking cover	
5050608	6	6	Screw	MC6S M10x20 Loc
60080116	7	4	Pin	
60077525	8	2	Pin	
60085957-17	9	1	Spillguard	
60085958-17	10	1	Spillguard	
60085961-22	11	1	Plate	
5002052	12	14	Screw	M6S M8x25
5013101	13	28	Washer	BRB 8,4 x 16
5011553	14	16	Nut	M6M M8 Loc-king
5018514	15	4	Bushing	D35 L=20
60057104	16	2	Hose	3/8" L=1050 1/2GRLM 3/8G90LMC
60057105	17	2	Hose	3/8" L=1250 1/2GRLM 3/8G90LMC
5028031	18	2	T-Adapter	
11120580	19	2	Adapter cpl.	
5016968	20	2	Hose clamp	
5022177	21	1	Cable tie	Red
5022179	22	1	Cable tie	Blue
5002128	23	4	Screw	M6S M14 x 40 (8.8)
5013107	24	8	Washer	BRB 15 x 26 x 2
5011556	25	4	Nut	M14
60087418	26	4	Plastic cover	
11260256-22	27	2	Side tine	
60034425	28	1	Warning decal	
60056616	29	2	Decal	"Q" medium 110mm
1123673	30	1	Warning decal	
1123674	31	1	Warning decal	"Read manual"
60105798	32	1	Decal	

© 2025 Jost