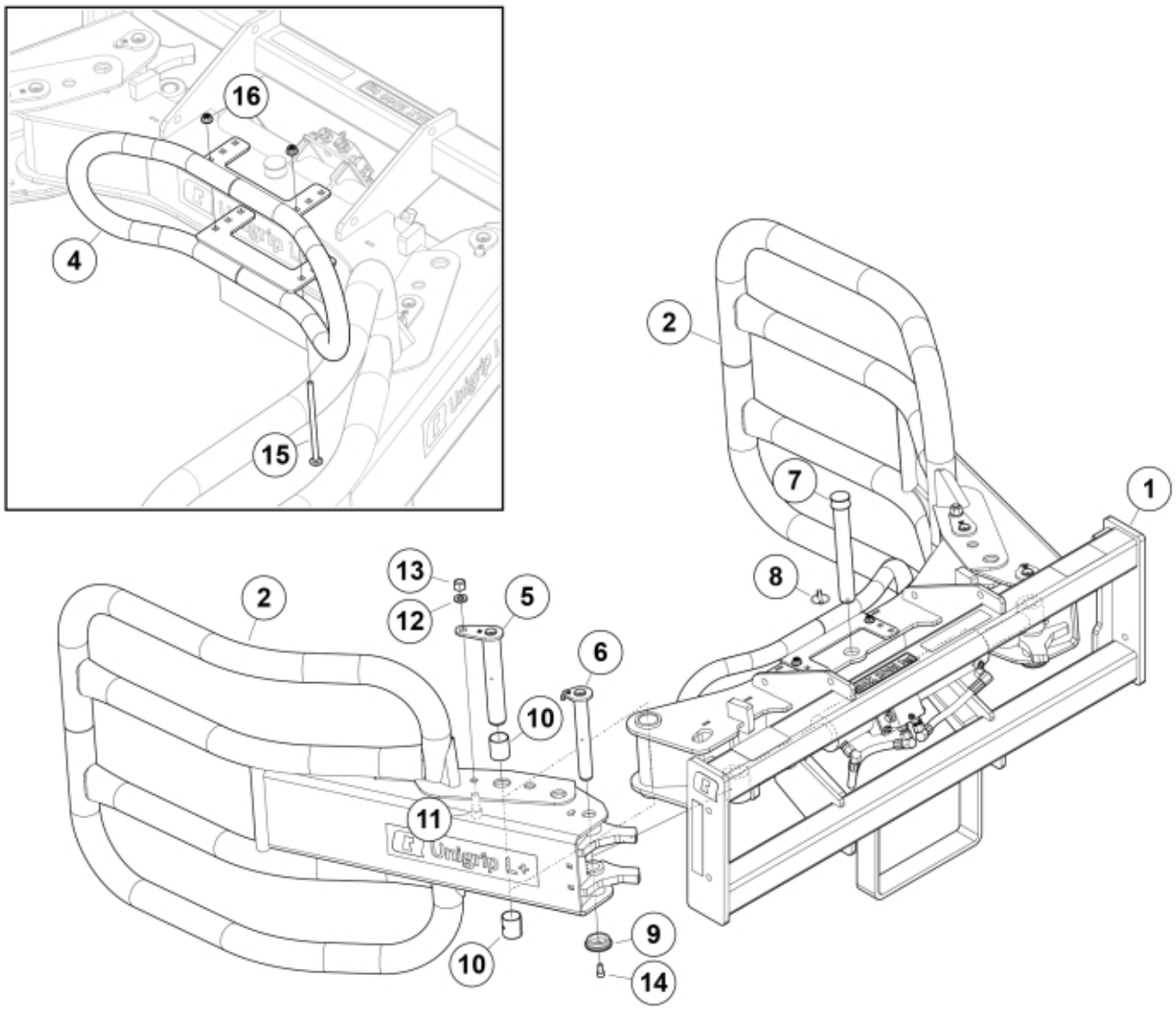

r11256507

© 2025 Jost

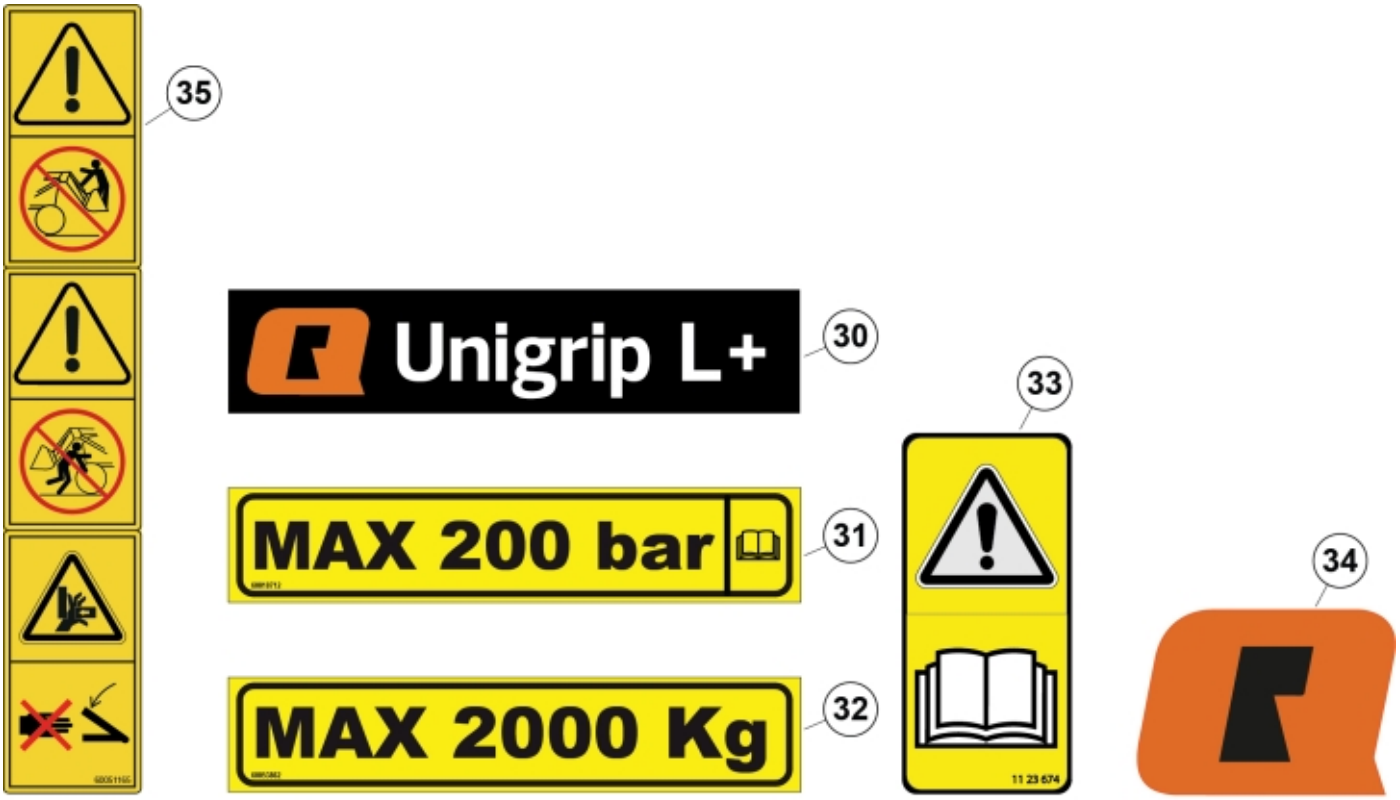

r11256507_2

© 2025 Jost

Part assemblies Unigrip L+

PartNo	Pos	Qty	Name	Specifications
60101336-17	1	1	Frame	
60101885-17	2	2	Arm	
60101385-1	3	1	Cylinder	
60092055-22	4	1	Bale support	
60101290	5	2	Pin	
60091746	6	2	Pin	
60101995	7	1	Pin	
5017002	8	1	Linch pin	
5215131	9	2	Locking cover	
5052083	10	4	Bushing	
5004153	11	2 PCS	Screw	MC6S M16x45 (8,8)
5013105	12	2	Washer	BRB 17 x 30 x 3 300HV
5011557	13	2	Nut	Loc-King M16
5050608	14	2	Screw	MC6S M10x20 Loc
5052699	15	2	Screw	
5050510	16	2 PCS	Nut	8 fzb M10
60103942	17	2	U-bolt	
60103977-1	18	2	Bracket	
60103939-22	19	1	Plate	
5053102	20	2	Screw	
5011553	21	4	Nut	M6M M8 Loc-king
5013101	22	4	Washer	BRB 8,4 x 16
60101380	23	1	Pressure relief valve	
20708137	24	2	Nut	M6 FZB, 708137
5013108	25	2	Washer	BRB 6,4 x 12 x 1,5
1120010	26	4	Adaptor	
5013852	27	4	Dowty washer	Tredo 3/8"
60104054	28	1	Hose	3/8" L=319 3/8G90LMC 3/8G90LMC
60104547	29	1	Hose	3/8" L=643 3/8G90LMC 3/8G90LMC
60105899	30	3	Decal	
60018712	31	1	Warning decal	
60053862	32	1	Warning decal	"Max 2000 kg"
1123674	33	1	Warning decal	"Read manual"
60049053	34	2	Decal	"Q" small 80x57
60051165	35	1 PCS	Warning decal	

© 2025 Jost