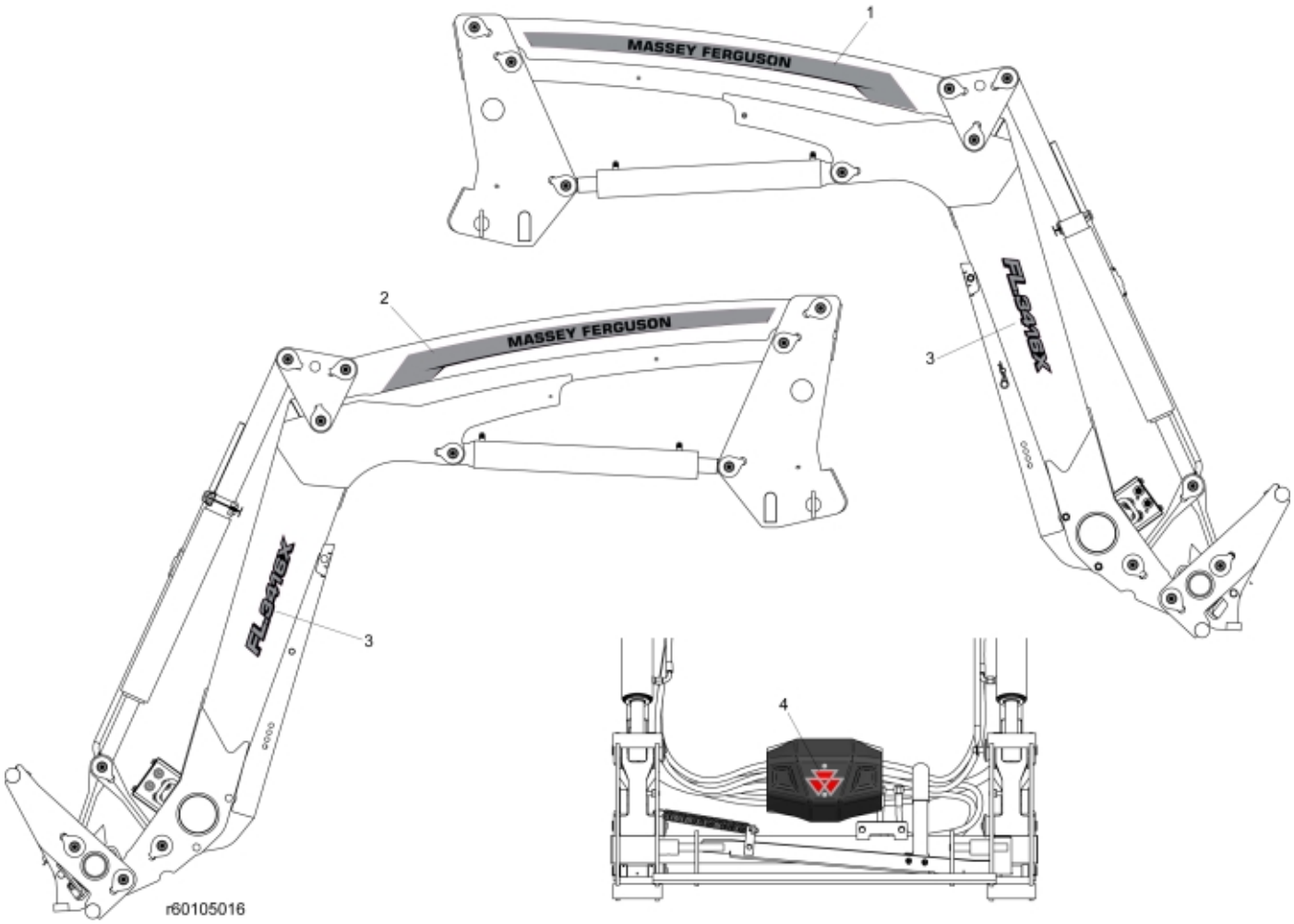

© 2025 Jost

Description	FL3416X
Part assemblies	Decals
Specification	Year From: 9/1/2024 12:00:00 AM
	Serial number from: 101243700054

PartNo	Pos	Qty	Name	Specifications
60103545	1	1	Decal Brand, RH	
60103544	2	1	Decal Brand, LH	
60103533	3	2	Decal, Model	FL3416X
60103941	4	1	Decal	MF Centre Cover

© 2025 Jost