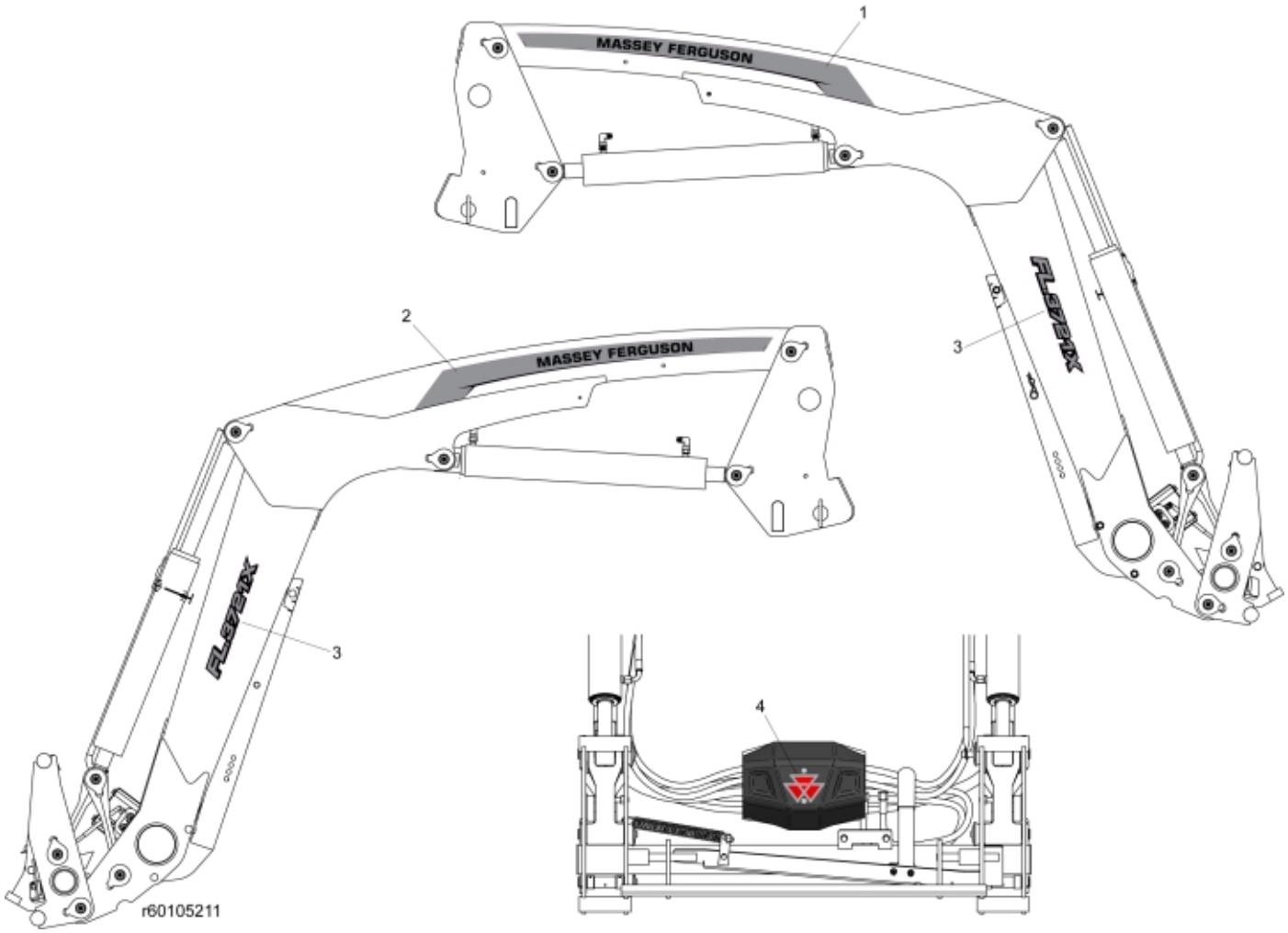

© 2025 Jost

Description	FL3721X
Part assemblies	Decals
Specification	Year From: 9/1/2024 12:00:00 AM

PartNo	Pos	Qty	Name	Specifications
60103541	1	1	Decal Brand, RH	
60103540	2	1	Decal Brand, LH	
60103497	3	2	Decal, Model	FL3721X
60103941	4	1	Decal	MF Centre Cover

© 2025 Jost