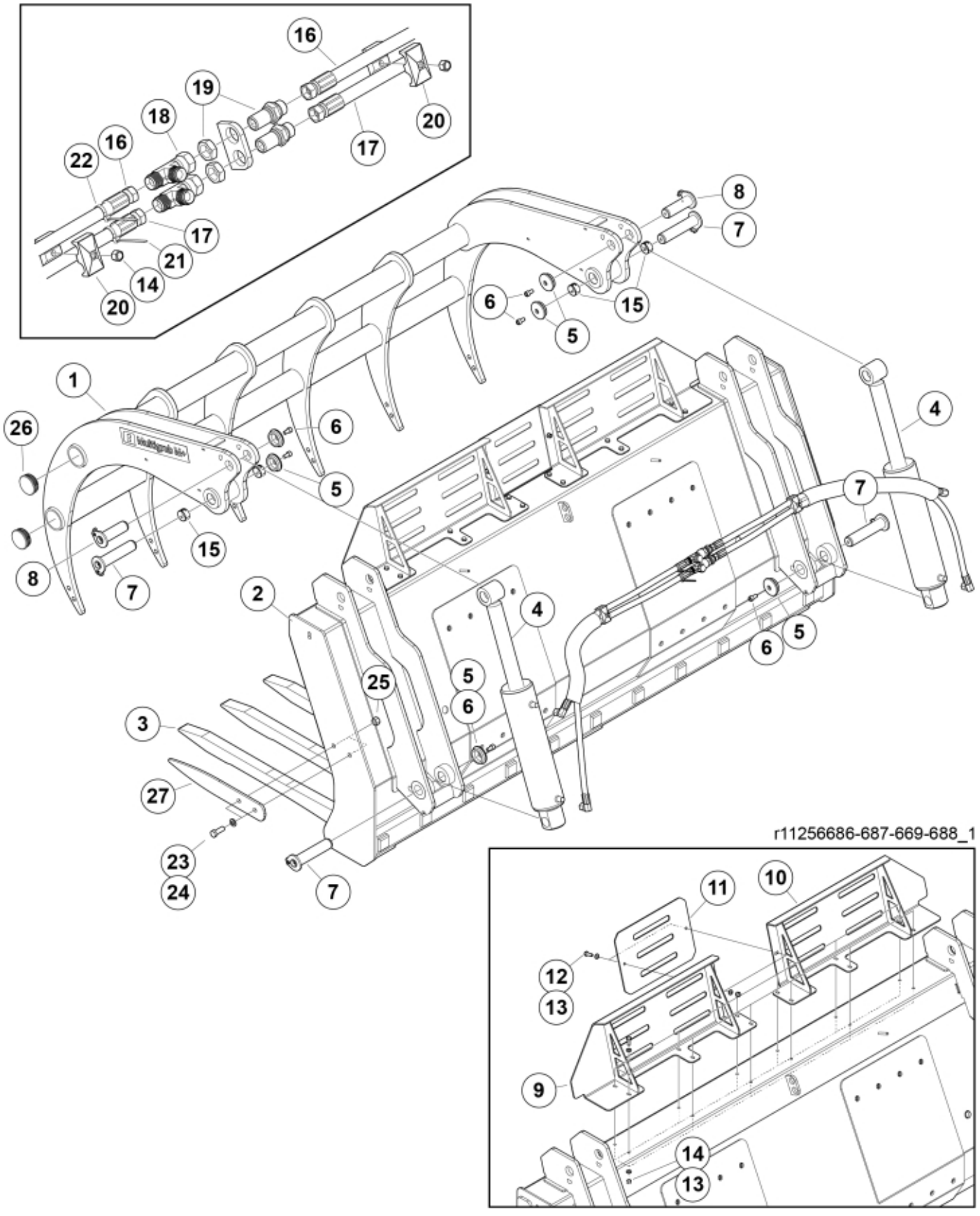
16
19
18
22
16
17
20
17
21
14
20
8
7
6
15
5
1
26
6
5
4
7
15
8
7
2
4
6
5
25
5
6
3
27
23
24
7
r11256686-687-669-688_1
11
10
12
13
9
14
13


© 2025 Jost




r11256686-687-669-688_2


© 2025 Jost

**Part assemblies** Multifork L+ 260

| PartNo | Pos | Qty | Name | Specifications |
|---|---|---|---|---|
| 60079180-17 | 1 | 1 | Jaw | |
| 60101417-17 | 2 | 1 | Frame | |
| 60101646 | 3 | 13 | Tine | |
| 60126216-1 | 4 | 2 | Cylinder | 4/8/2026 12:00:00 AM |
| 5215131 | 5 | 6 | Locking cover | |
| 5050608 | 6 | 6 | Screw | MC6S M10x20 Loc |
| 60080116 | 7 | 4 | Pin | |
| 60077525 | 8 | 2 | Pin | |
| 60085957-17 | 9 | 1 | Spillguard | |
| 60085958-17 | 10 | 1 | Spillguard | |
| 60085961-22 | 11 | 1 | Plate | |
| 5002052 | 12 | 14 | Screw | M6S M8x25 |
| 5013101 | 13 | 28 | Washer | BRB 8,4 x 16 |
| 5011553 | 14 | 16 | Nut | M6M M8 Loc-king |
| 5018514 | 15 | 4 | Bushing | D35 L=20 |
| 60057104 | 16 | 2 | Hose | 3/8" L=1050 1/2GRLM 3/8G90LMC |
| 60057105 | 17 | 2 | Hose | 3/8" L=1250 1/2GRLM 3/8G90LMC |
| 5028031 | 18 | 2 | T-Adapter | |
| 11120580 | 19 | 2 | Adapter cpl. | |
| 5016968 | 20 | 2 | Hose clamp | |
| 5022177 | 21 | 1 | Cable tie | Red |
| 5022179 | 22 | 1 | Cable tie | Blue |
| 5002128 | 23 | 4 | Screw | M6S M14 x 40 (8.8) |
| 5013107 | 24 | 8 | Washer | BRB 15 x 26 x 2 |
| 5011556 | 25 | 4 | Nut | M14 |
| 60087418 | 26 | 4 | Plastic cover | |
| 11260256-22 | 27 | 2 | Side tine | |
| 60034425 | 28 | 1 | Warning decal | |
| 60056616 | 29 | 2 | Decal | "Q" medium 110mm |
| 1123673 | 30 | 1 | Warning decal | |
| 1123674 | 31 | 1 | Warning decal | "Read manual" |
| 60105798 | 32 | 1 | Decal | |


© 2025 Jost