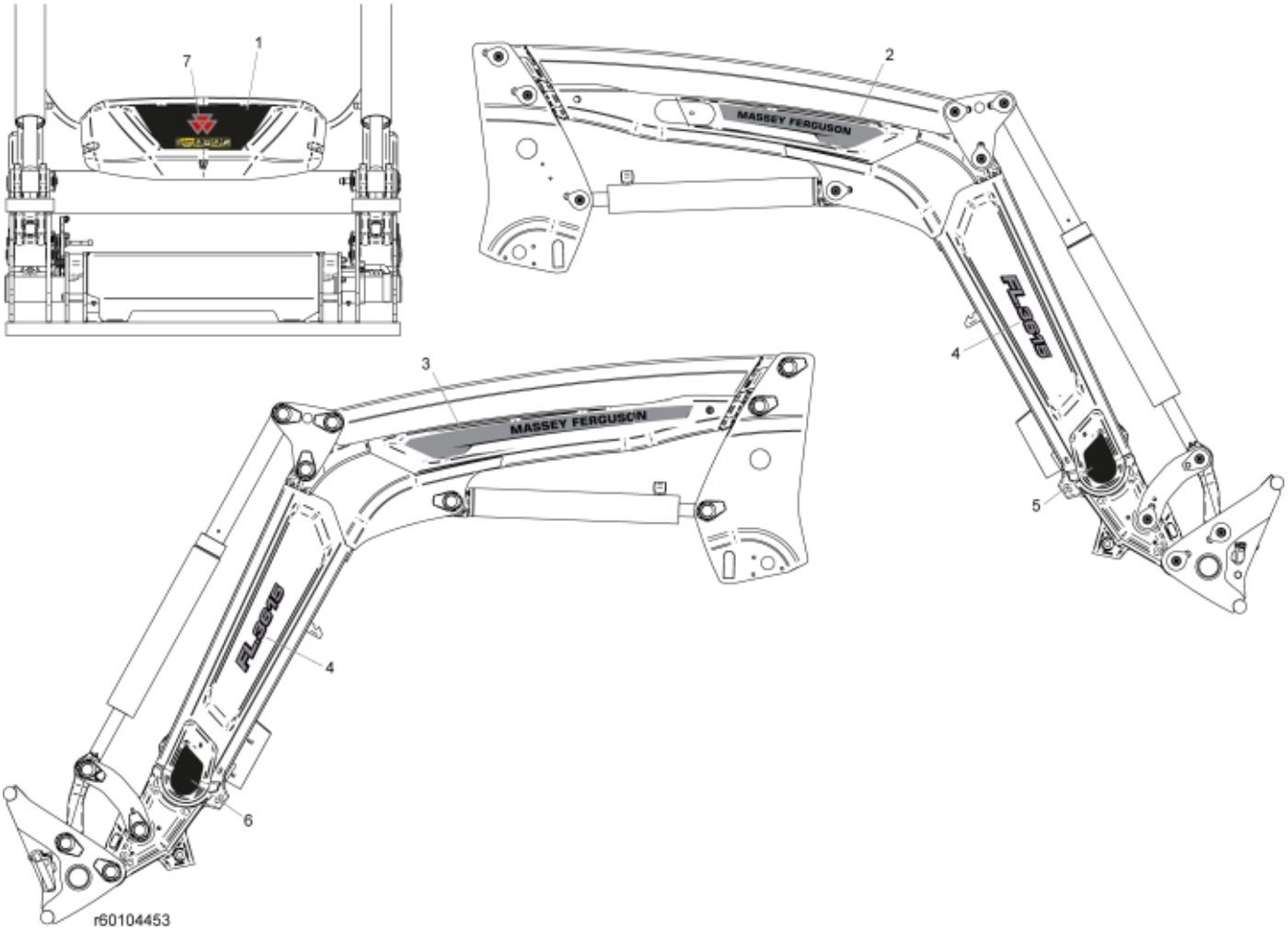
1
7
2
MASSEY FERGUSON
FL6015
4
5
3
MASSEY FERGUSON
FL6015
4
6
r60104453

© 2025 Jost

Description	FL3615
Part assemblies	Decals
Specification	Year From: 9/1/2024 12:00:00 AM

PartNo	Pos	Qty	Name	Specifications
60108090	1	1	Decal	Centre Cover
60102990	2	1	Decal Brand, RH	
60102985	3	1	Decal Brand, LH	
60102992	4	2	Decal, Model	FL3615
60022989	5	1	Decal RH	Cover, small
60108091	6	1	Decal LH	Cover, small
60103941	7	1	Decal	MF Centre Cover

© 2025 Jost